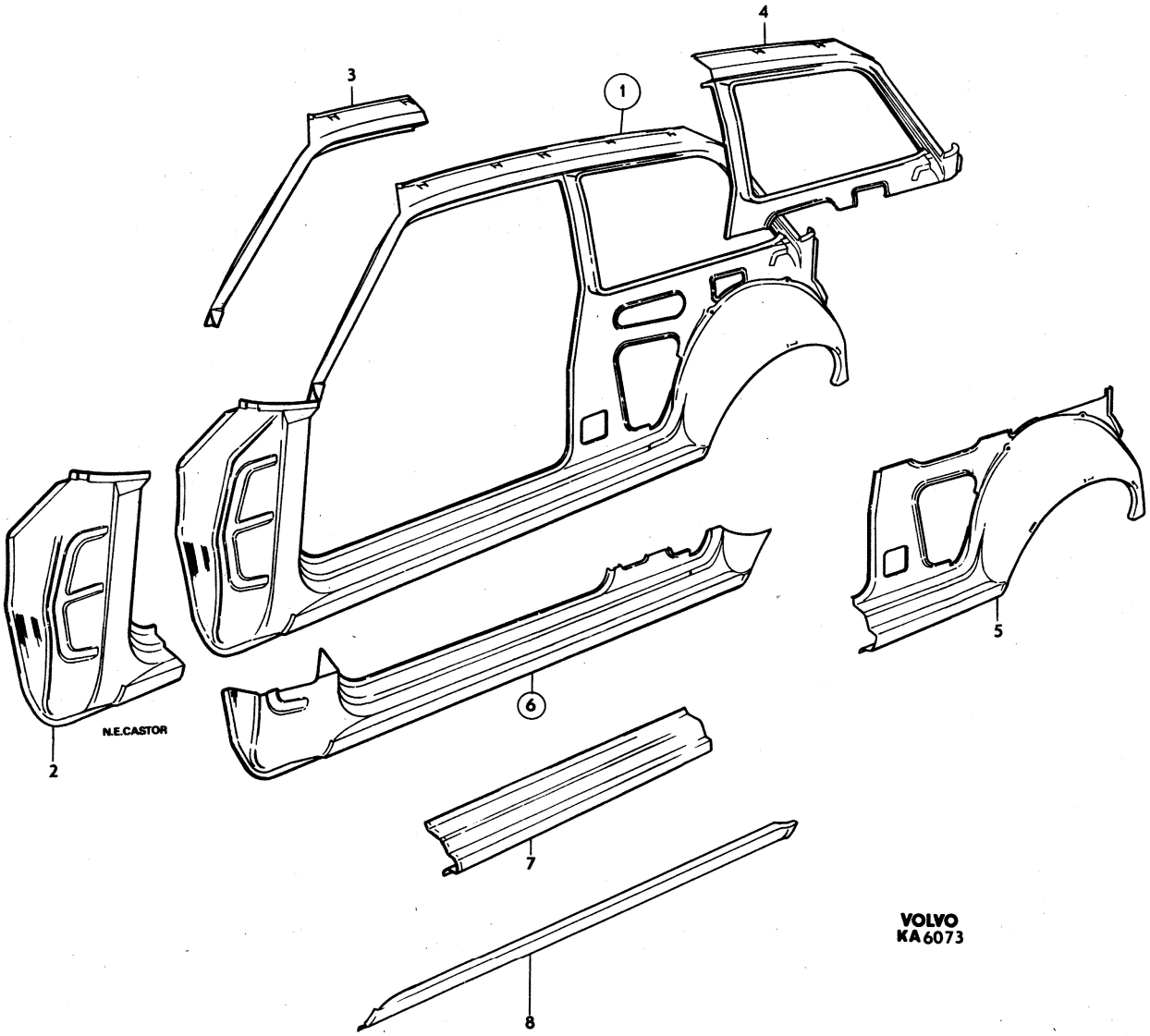
1
2
3
4
5
6
7
8
N.E.CASTOR
VOLVO
KA 6073

Sida Page	Grupp Group	Detaljer för karossidor	Body side components	Illustration	0400
		142	142	6073	
34	8			1979–11	

Pos. Fig.	Antal/Quantity				Artikel nr Part No	Benämning	Description	Sats Kit	B P S R	Anmärkning Notes	
1	1	–	–	–		Karossida, V	Body side, L		8		1010
	1	–	–	–		Karossida, H	Body side, R		8		1020
2	1	–	–	–	675159-8	•Torpedsida, yttre, V	•Cowl side, outer, L				1030
	1	–	–	–	675160-6	•Torpedsida, yttre, H	•Cowl side, outer, R				1040
3	1	–	–	–	675157-2	•Taksvällare, yttre, V	•Cant rail, outer, L				1050
	1	–	–	–	675158-0	•Taksvällare, yttre, H	•Cant rail, outer, R				1060
4	1	–	–	–	675153-1	•Fönsterram, V	•Window frame, L				1070
	1	–	–	–	675154-9	•Fönsterram, H	•Window frame, R				1080
5	1	–	–	–	675151-5	•Hjulhus, bakre, yttre, V	•Wheel housing, rear, outer, L				1090 1100
	1	–	–	–	675152-3	•Hjulhus, bakre, yttre, H	•Wheel housing, rear, outer, R				10 20
6	1	–	–	–	675155-6	•Bottensvällare, V	•Bottom rail, L				1130
	1	–	–	–	675156-4	•Bottensvällare, H	•Bottom rail, R				1140
7	2	–	–	–	679642-9	••Mellandel, lång	••Section, long				1150
8	1	–	–	–	679652-8	••Bottensvällare, undre del, V	••Bottom rail, lower, L				1160 1170
	1	–	–	–	679653-6	••Bottensvällare, undre del, H	••Bottom rail, lower, R				30 1190