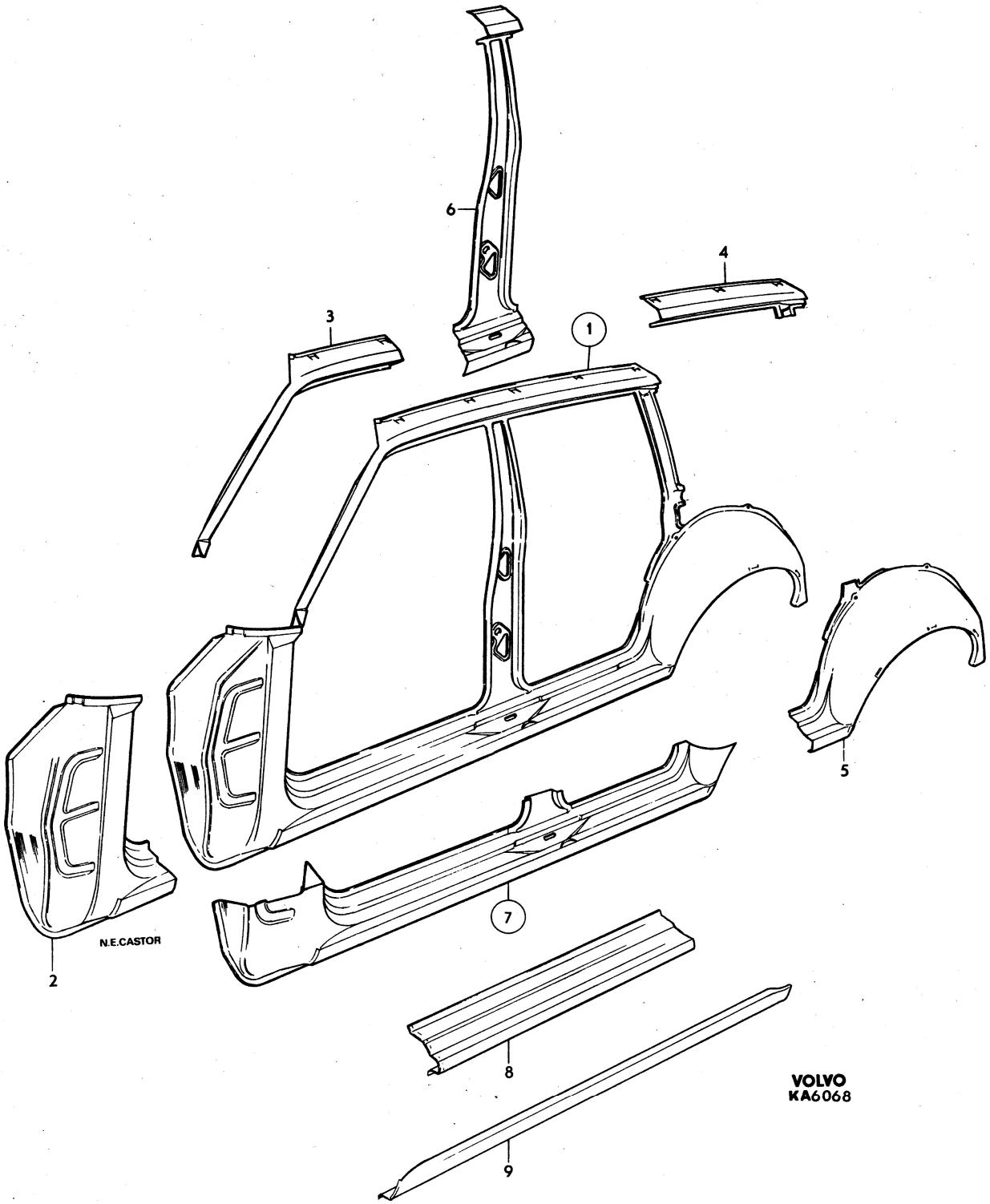
6
4
3
1
5
7
N.E.CASTOR
2
8
9
VOLVO
KA6068

Sida Page	Grupp Group	Detaljer för karossidor	Body side components	Illustration	0500
38	8	145	145	6068 1979–11	

Pos. Fig.	Antal/Quantity				Artikel nr Part No	Benämning	Description	Sats Kit	B P S R	Anmärkning Notes	
1	1	–	–	–		Karossida, V	Body side, L		8		1010
	1	–	–	–		Karossida, H	Body side, R		8		1020
2	1	–	–	–	675159-8	•Torpedsida, yttre, V	•Cowl side, outer, L				1030
	1	–	–	–	675160-6	•Torpedsida, yttre, H	•Cowl side, outer, R				1040
3	1	–	–	–	675157-2	•Taksvällare,	•Cant rail,				1050
						främre, yttre, V	forward outer, L				1060
	1	–	–	–	675158-0	•Taksvällare,	•Cant rail,				1070
						främre, yttre, H	forward, outer, R				1080
4	1	–	–	–	675169-7	•Taksvällare	•Cant rail,				1090
						bakre, yttre, V	rear, outer, L				1100
	1	–	–	–	675170-5	•Taksvällare,	•Cant rail,				[illegible]
						bakre, yttre, H	rear, outer, R				[illegible]
5	1	–	–	–	675163-0	•Hjulhus, bakre,	•Wheel housing,				1130
						yttre, V	rear, outer, L				1140
	1	–	–	–	675164-8	•Hjulhus, bakre,	•Wheel housing				1150
						yttre, H	rear, outer, R				1160
6	1	–	–	–	675161-4	•Mellanstolpe	•Centre pillar,				1170
						inre, V	inner, L				[illegible]
	1	–	–	–	675162-2	•Mellanstolpe,	•Centre pillar,				1190
						inre, H	inner, R				1200
7	1	–	–	–	675165-5	•Bottensvällare, V	•Bottom rail, L				1210
	1	–	–	–	675166-3	•Bottensvällare, H	•Bottom rail, R				1220
8	2	–	–	–	679642-9	••Mellandel, lång	••Section, long				1230
9	1	–	–	–	679652-8	••Bottensvällare,	••Bottom rail,				1240
						undre del, V	lower, L				1250
	1	–	–	–	679653-6	••Bottensvällare	••Bottom rail				1260
						undre del, H	lower, R				1270