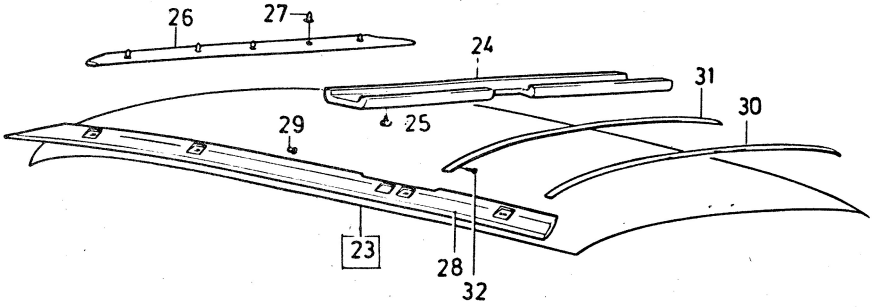

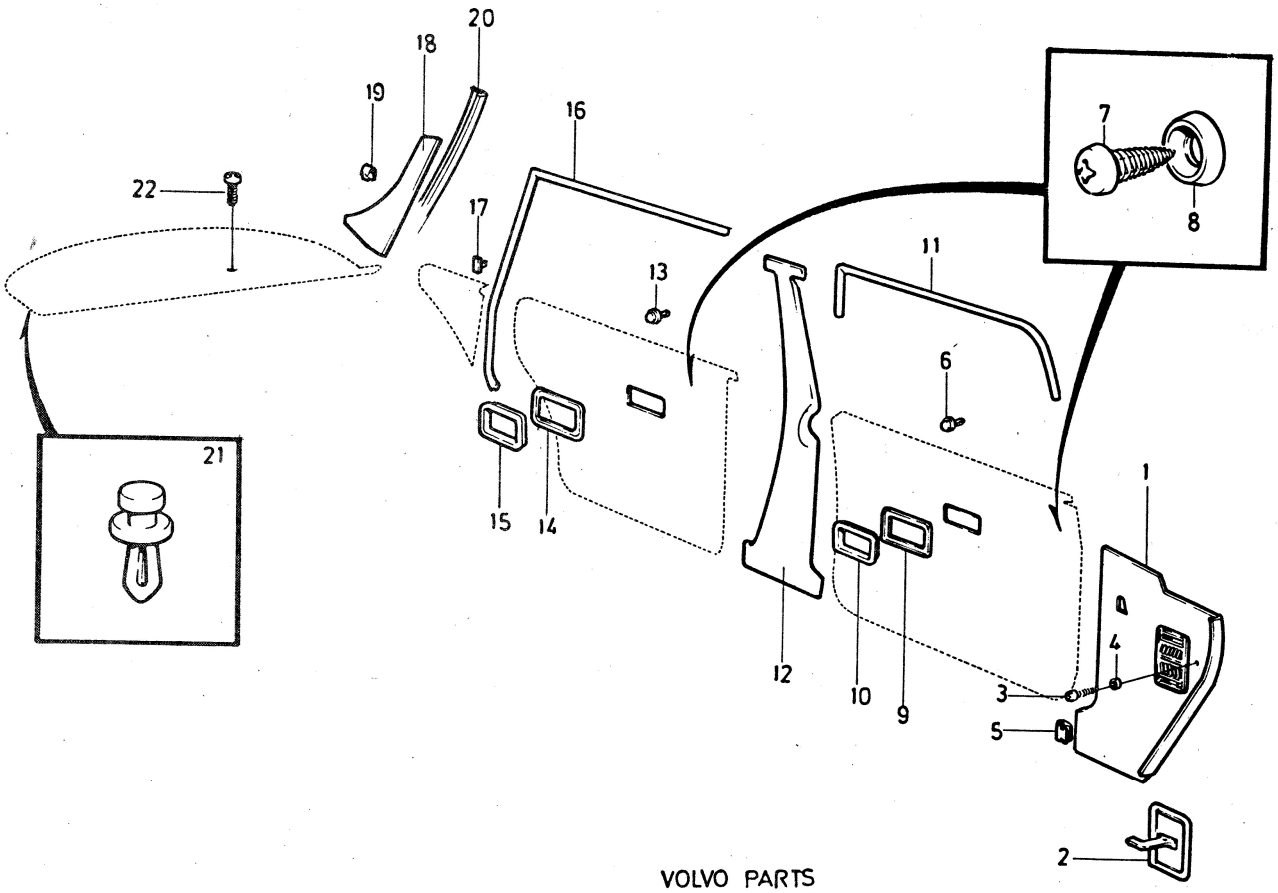

VOLVO PARTS
1 080 26206
(109:1)

Sida Page	Grupp Group	Inredningsdetaljer	Interior components	Illustration	4120
376	8	144	144	26206 1979–11	

	Pos. Fig.	Antal/Quantity				Artikel nr Part No	Benämning	Description	Sats Kit	B P S R	Anmärkning Notes	
	1	1	–	–	–	681880-1	Panel, V	Panel, L			(676683)	0020
		1	–	–	–	681881-9	Panel, H	Panel, R			CH–263069	0040
											(676684)	0060
		1	–	–	–	686520-8	Panel, H	Panel, R			CH 263070–	0080
	2	–	–	–	–		Lucka	Lid			SE GRUPP 9	0100
	3	3	–	–	–	955127-6	Skruv	Screw			L12	0120
		2	–	–	–	955128-4	Skruv	Screw			L14. ALT	0140
	4	3	–	–	–	960138-6	Bricka	Washer			ALT	0160
		5	–	–	–	960138-6	Bricka	Washer			ALT	0180
	5	8	–	–	–	944385-4	Clips	Clip			SEN UTF	[illegible]
	6	32	–	–	–	95290-3	Fäste, plåt	Anchorage, metal			TID UTF	[illegible]
		40	–	–	–	680097-3	Fäste, plast	Anchorage, plastic			SEN UTF	0240
	7	8	–	–	–	955154-0	Skruv	Screw				0260
	8	8	–	–	–	959057-1	Bricka	Washer				0280
	9	2	–	–	–	678096-9	Ram	Frame				0300
	10	2	–	–	–	677950-8	Sarg	Frame				0320
	11	5200	–	–	–	678238-7	Kantskyddslist	Edge moulding			2X2600	[illegible]
	12	1	–	–	–	677164-6	Panel, V	Panel, L			CH–194139	[illegible]
x		1	–	–	–	1204806-2	Panel, V	Panel, L			CH 194140– SBUR	0380
x		1	–	–	–	1204824-5	Panel, V	Panel, L			CH 194140– SBMR	0400
		1	–	–	–	677165-3	Panel, H	Panel, R			CH–194139	0420
x		1	–	–	–	1204807-0	Panel, H	Panel, R			CH 194140– SBUR	0440
		1	–	–	–	680324-1	Panel, H	Panel, R			CH 194140– SBMR	0460
	13	26	–	–	–	95290-3	Fäste, plåt	Anchorage, metal			TID UTF	0480
		32	–	–	–	680097-3	Fäste, plast	Anchorage, plastic			SEN UTF	0500
	14	2	–	–	–	678096-9	Ram	Frame				0520
	15	2	–	–	–	677950-8	Sarg	Frame				0540
	16	5200	–	–	–	678238-7	Kantskyddslist	Edge moulding			2X2600	0560
	17	2	–	–	–	95290-3	Fäste	Anchorage				0580
x	18	1	–	–	–	692691-9	Panel, V	Panel, L		8	CH–138699	0600
		1	–	–	–	695005-9	Panel, V	Panel, L			CH 138700–263069	0620
		1	–	–	–	695610-6	Panel, V	Panel, L			CH 263070–	0640
		1	–	–	–	692692-7	Panel, H	Panel, R		8	CH–138699	0660
		1	–	–	–	695006-7	Panel, H	Panel, R			CH 138700–263069	0680
		1	–	–	–	695611-4	Panel, H	Panel, R			CH 263070–	0700
	19	8	–	–	–	95290-3	Fäste, plåt	Anchorage, metal			CH–37099	0720
		8	–	–	–	680097-3	Fäste, plast	Anchorage, plastic			CH 37100–	0740
	20	1	–	–	–	692818-8	Stoppning, V	Upholstery, L			SEN UTF	[illegible]
		1	–	–	–	692819-6	Stoppning, H	Upholstery, R			SEN UTF	0780
	21	7	–	–	–	680097-3	Fäste	Anchorage			TID UTF. ALT	0800
		7	–	–	–	683258-8	Fäste	Anchorage			SEN UTF. ALT	0820
	22	2	–	–	–	1221346-8	Fäste	Anchorage			ALT	0840
	23	1	–	–	–	691865-0	Innertak	Head lining			UTL	0860
		1	–	–	–	692702-4	Innertak	Head lining			MTL	[illegible]
		ERF	–	–	–	99755-1	•Trikåplast	•Plastic–coated fabric		8	METERVARA	[illegible]
												0920
	24	1	–	–	–	692067-2	Stoppning	Upholstery			UTL	0940
	25	6	–	–	–	666629-1	Plugg	Plug			UTL	0960
	26	1	–	–	–	692081-3	Stoppning	Upholstery		8		0980
	27	5	–	–	–	678274-2	Clips	Clip				1000
x	28	1	–	–	–	685542-3	Stoppning, V	Upholstery, L			ALT (692397)	1020
		1	–	–	–	685543-1	Stoppning, H	Upholstery, R			ALT	1040
	29	2	–	–	–	666629-1	Plugg	Plug				1060
	30	5	–	–	–	677517-5	Taksprygel	Roof bow			UTL	1080
		1	–	–	–	677517-5	Taksprygel	Roof bow			MTL	1100
	31	1	–	–	–	681569-0	Taksprygel	Roof bow			MTL	1120
	32	2	–	–	–	955126-8	Skruv	Screw				1140