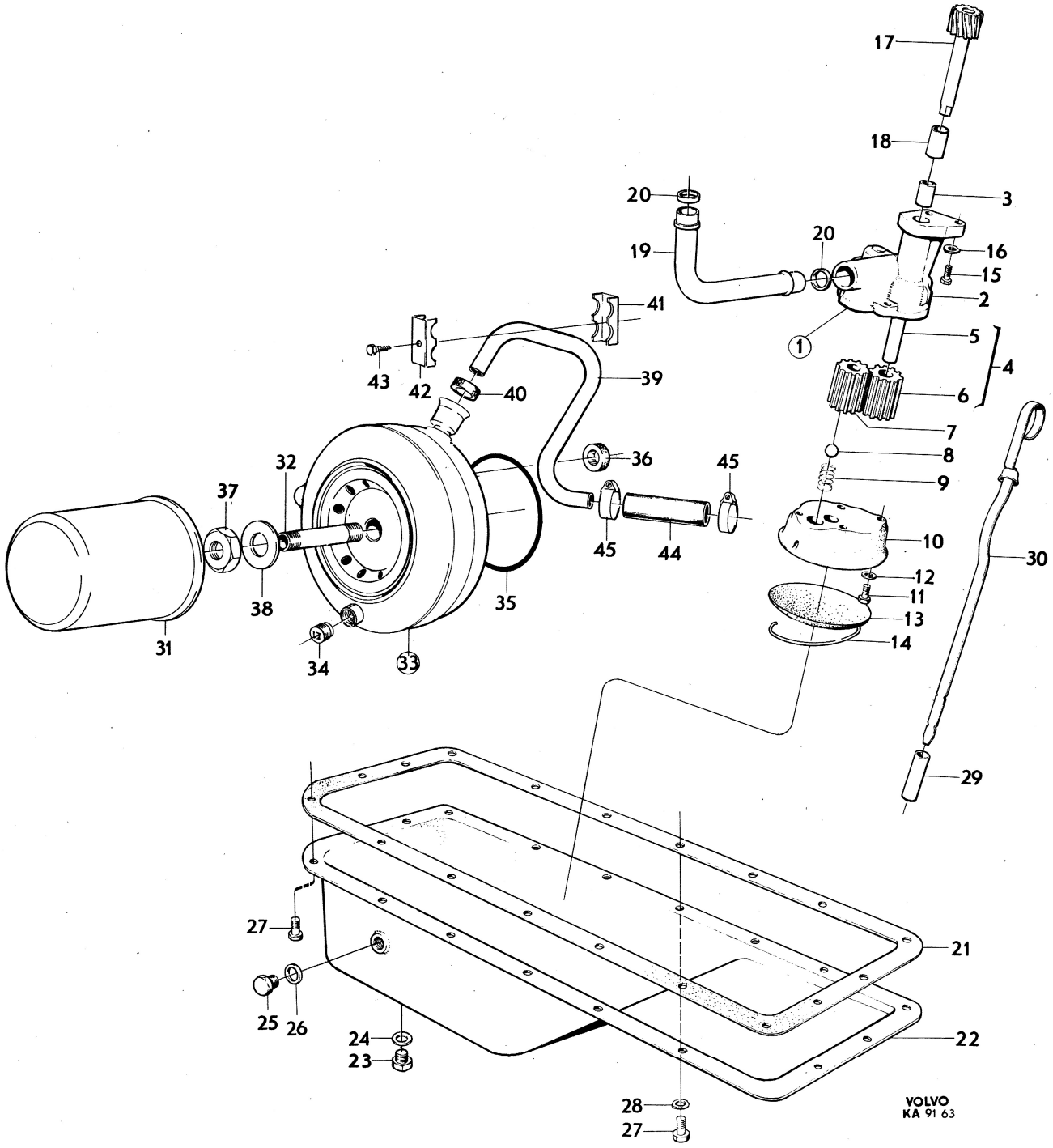
17
18
3
20
20
16
19
15
2
41
1
5
4
43
42
40
39
6
7
8
36
45
32
9
37
45
44
10
30
12
11
38
35
13
31
34
33
14
29
27
21
25
26
24
23
22
28
27
VOLVO
KA 91 63

Sida / Page: 24 | Grupp / Group: 2a | Smörjsystem | Lubricating system | Illustration 9163 1979–11 | 0350

	Pos. Fig.	Antal/Quantity B18	B20			Artikel nr Part No	Benämning	Description	Sats Kit	B P S R	Anmärkning Notes	
	1	1	–	–	–	418280-4	Oljepump	Oil pump			ERS AV 1218706–8	0020
x		–	1	–	–	1218706-8	Oljepump	Oil pump			(419542)	0040
	2	1	1	–	–		•Hus	•Housing		8		0060
	3	2	2	–	–	18130-5	•Bussning	•Bushing				0080
	4	1	–	–	–	418283-8	•Kuggdrev	•Gear				0100
		–	1	–	–	430112-3	•Kuggdrev	•Gear				0120
	5	1	1	–	–		••Axel	••Shaft		8		0140
	6	1	1	–	–		••Kuggdrev	••Gear		8		0160
	7	1	–	–	–	418296-0	•Kugghjul	•Gear				0180
		–	1	–	–	430114-9	•Kugghjul	•Gear				0200
	8	1	1	–	–	400605-2	•Kula	•Ball				0220
	9	1	1	–	–	430161-0	•Fjäder	•Spring				[illegible]
	10	1	–	–	–	418287-9	•Lock	•Cover				0260
x		–	1	–	–	1218707-6	•Lock	•Cover			(419543)	0280
	11	4	2	–	–	955513-7	•Skruv	•Screw			L 19	0300
		–	2	–	–	940117-5	•Skruv	•Screw			L 32	0320
	12	4	–	–	–	955893-3	•Bricka	•Washer				0340
		–	4	–	–	941906-0	•Fjädrande bricka	•Resilient washer				[illegible]
	13	1	1	–	–	418288-7	•Sil	•Strainer				0380
	14	1	1	–	–	418289-5	•Låstråd	•Lock wire	S			0400
	15	2	2	–	–	940135-7	Skruv	Screw				0420
	16	2	2	–	–	941907-8	Fjädrande bricka	Resilient washer				0440
	17	1	1	–	–	418277-0	Drivhjul med axel	Drive gear and shaft				0460
	18	1	1	–	–		Bussning	Bushing			SE SIDA 10, 1-C11	0480
	19	1	1	–	–	419539-2	Tryckrör	Delivery pipe				0500
	20	2	2	–	–	418360-4	Gummiring	Rubber ring	S			0520
x	21	1	1	–	–	463587-6	Packning	Gasket	S		(418262)	0540
	22	1	1	–	–	418260-6	Oljesump	Sump				0560
	23	1	1	–	–	190798-9	Propp	Plug				0580
	24	1	1	–	–	18818-5	Packning	Packing	S			0600
	25	1	1	–	–	191086-8	Propp	Plug				0620
	26	1	1	–	–	18822-7	Packning	Packing	S			0640
	27	18	18	–	–	942624-8	Skruv	Screw			MPOS L 13	0660
		17	–	–	–	942624-8	Skruv	Screw			UPOS L 13	0680
		1	–	–	–	955523-6	Skruv	Screw			UPOS L 16	0700
	28	1	–	–	–	941907-8	Fjädrande bricka	Resilient washer			UPOS	0720
	29	1	1	–	–	418645-8	Rör	Pipe				0740
	30	1	1	–	–	418643-3	Oljemätsticka	Dipstick			B18. B20A–D. B20E–F, VST	0760
		–	1	–	–	419824-8	Oljemätsticka	Dipstick			B20E–F, HST	[illegible]
x	31	1	1	–	–	1266286-2	Oljefilter	Oil filter			(418432)	[illegible]
	32	1	1	–	–	418440-4	Nippel	Nipple			B20A–D. B20E(496943–	0820
											496946). B20F	0840
		–	1	–	–	460232-2	Nippel	Nipple			B20E(498268–498271)	0860
	33	–	1	–	–	460233-0	Oljekylare	Oil cooler			B20E(498268–498271)	0880
		–	–	–	–						ERS AV 1 ST 462663–6,	[illegible]
		–	–	–	–						1 ST 946681–4	[illegible]
	34	–	1	–	–	952070-1	•Propp	•Plug				0940
	35	–	1	–	–	925255-2	Tätningsring	Seal ring	S			0960
	36	–	1	–	–	418411-5	Tätningsring	Seal ring	S			0980
	37	–	1	–	–	191701-2	Mutter	Nut				1000
	38	–	1	–	–	824589-6	Bricka	Washer				1020
	39	–	1	–	–	460362-7	Vattenavloppsrör	Water outlet pipe				1040
	40	–	1	–	–	418411-5	Tätningsring	Seal ring	S			1060
	41	–	1	–	–	460361-9	Klammer	Clamp				1080
	42	–	1	–	–	460364-3	Klammer	Clamp				1100
	43	–	1	–	–	960865-4	Skruv	Screw				1120
		–	110	–	–	943368-1	Slang	Hose				1140
	45	–	2	–	–	943473-9	Slangklammer	Hose clip				1160