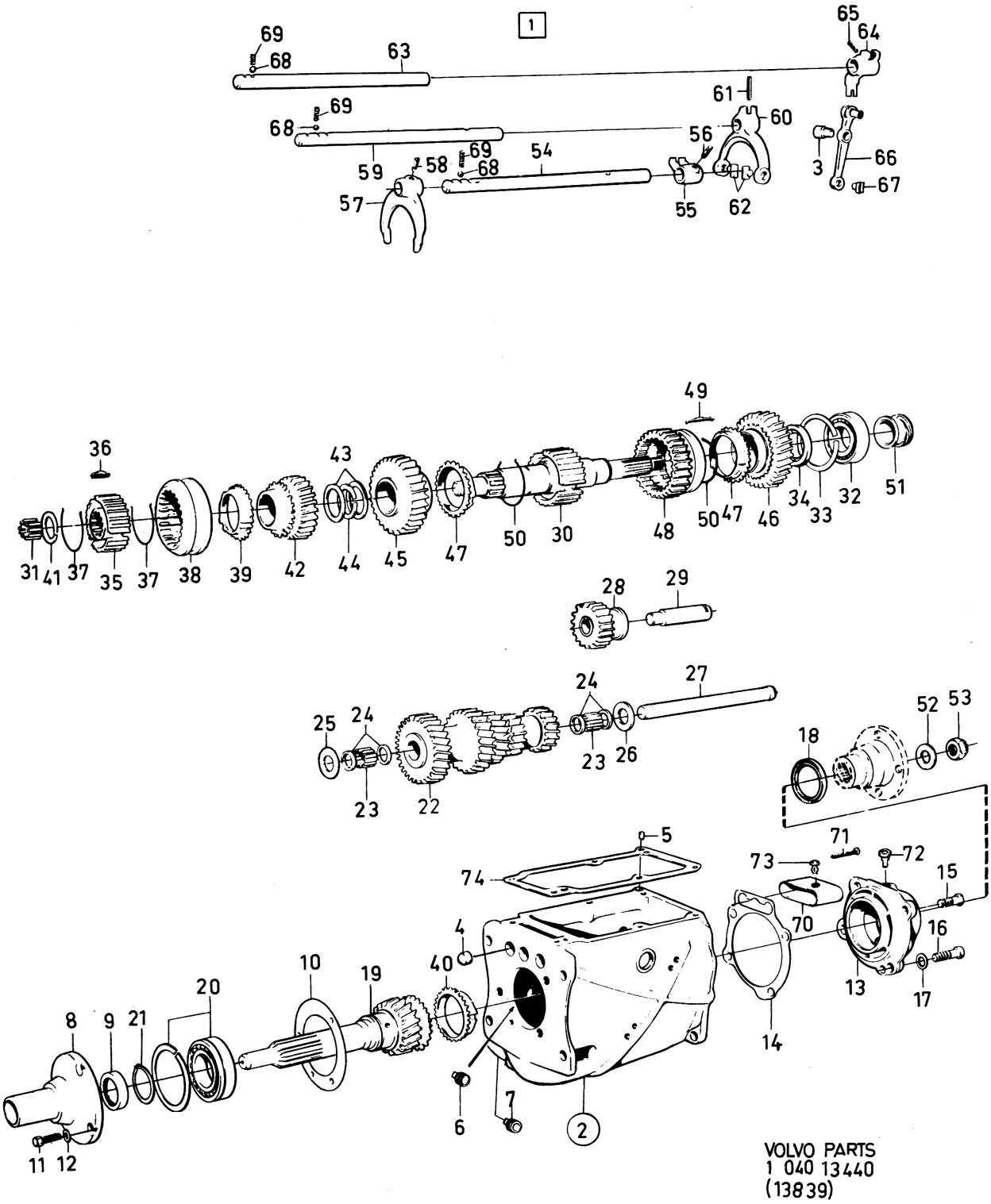

VOLVO PARTS
1 040 13440
(13839)

Sida 18 Page | Grupp 4 Group | Växellåda M41 | Gearbox M41 | Illustration 13441 | 0350

1975-01

Pos. Fig.	Antal/Quantity 254 742	254 777			Detalj nr Part No	Benämning	Description	Sats Kit	Anmärkning Notes	
1	1	–	–	–	254742-0	Växellåda	Gearbox			1010
	–	1	–	–	254777-6	Växellåda	Gearbox			1020
2	1	–	–	–	380805-2	•Hus	•Housing	8	ERS AV 1 ST 380999–3,	1030
									1 ST 380877–1,	1033
									1 ST 380878–9.	1035
	–	1	–	–	380999-3	•Hus	•Housing			1040
3	1	1	–	–	656517-0	••Lagertapp	••Bearing pin			1050
4	3	3	–	–	191496-9	••Hattplugg	••Hat plug			1060
5	2	2	–	–	191529-7	••Pinne	••Pin			1070
6	1	1	–	–	952358-0	•Propp	•Plug			1080
7	1	1	–	–	951901-8	•Propp	•Plug			1090
8	1	–	–	–	380915-9	•Lock	•Cover			1100
	–	1	–	–	380190-9	•Lock	•Cover			5
9	1	1	–	–	191685-7	•Tätningsring	•Seal ring			1110
10	1	1	–	–	380914-2	•Packning	•Gasket		(656505)	1120
11	3	3	–	–	192622-9	•Skruv	•Screw			1130
12	3	3	–	–	380381-4	•Gummiring	•Rubber ring			1140
13	1	1	–	–	380445-7	•Lock	•Cover			1150
14	1	1	–	–	380800-3	•Packning	•Gasket			)
15	1	–	–	–	380570-2	•Mellanfläns	•Spacer flange			1170
	–	1	–	–	381631-1	•Mellanfläns	•Spacer flange			1175
16	1	1	–	–	380446-5	•Packning	•Gasket			1180
17	4	4	–	–	955535-0	•Skruv	•Screw			1200
18	1	1	–	–	380379-8	•Låsbricka	•Lock washer		A 55,2	1210
	1	1	–	–	380380-6	•Låsbricka	•Lock washer		A 68,7	1220
19	1	1	–	–	380136-2	•Ingående axel	•Input shaft			1230
20	1	1	–	–	11145-0	•Kullager	•Ball bearing			1240
21	1	1	–	–		•Låsring, alt	•Circlip, alt.			1250
	–	–	–	–	190737-7	••Tj 2,0	••Th 2.0			1260
	–	–	–	–	190814-4	••Tj 2,1	••Th 2.1			1270
	–	–	–	–	190815-1	••Tj 2,2	••Th 2.2			1280
	–	–	–	–	191105-6	••Tj 2,3	••Th 2.3			1290
22	1	1	–	–	380894-6	•Kugghjul	•Gear			1300
23	42	42	–	–	183498-5	•Rulle	•Roller			1310
24	4	4	–	–	380809-4	•Distansring	•Spacer ring			1320
25	1	1	–	–	380813-6	•Tryckbricka, främre	•Thrust washer,front		D 38	1330
26	1	1	–	–	380810-2	•Tryckbricka, bakre	•Thrust washer,rear		D 34	1340
27	1	1	–	–	380808-6	•Axel	•Shaft			1350
28	1	–	–	–	380811-0	•Backdrev	•Reverse gear			1360
	–	1	–	–	380877-1	•Backdrev	•Reverse gear			)
29	1	–	–	–	380615-5	•Axel	•Shaft			1380
	–	1	–	–	380878-9	•Axel	•Shaft			1390
30	1	1	–	–	380571-0	•Huvudaxel	•Main shaft			1400
31	14	14	–	–	181120-7	•Rulle	•Roller			1410
32	1	1	–	–	11024-7	•Kullager	•Ball bearing			1420
33	1	1	–	–	380175-0	•Distansring	•Spacer ring			)
34	1	1	–	–		•Låsring, alt.	•Circlip, alt			1440
	–	–	–	–	914537-6	••Tj 2,5	••Th 2.5			1450
	–	–	–	–	942339-3	••Tj 2,6	••Th 2.6			1460
	–	–	–	–	942340-1	••Tj 2,7	••Th 2.7			1470
35	1	1	–	–		•Låsring,alt.	•Circlip, alt.			1480
	–	–	–	–	190684-1	••Tj 2,00	••Th 2.00			1490
	–	–	–	–	190685-8	••Tj 2,10	••Th 2.10			1500
	–	–	–	–	190686-6	••Tj 2,15	••Th 2.15			1510
	–	–	–	–	190687-4	••Tj 2,25	••Th 2.25			1520
	–	–	–	–	190688-2	••Tj 2,30	••Th 2.30			1530
36	1	1	–	–	380138-8	•Synkroniseringsnav	•Syncronizing hub			1540
37	3	3	–	–	656514-7	•Medbringare	•Locating key			1550
38	2	2	–	–	86713-5	•Fjäderring	•Clamping ring			1560
39	1	1	–	–	656518-8	•Kopplingshylsa	•Engaging sleeve			2010
40	2	2	–	–	656138-5	•Synkroniseringskona	•Syncronizing cone			2020
41	1	1	–	–	380921-7	•Synkroniseringskona	•Syncronizing cone			2025