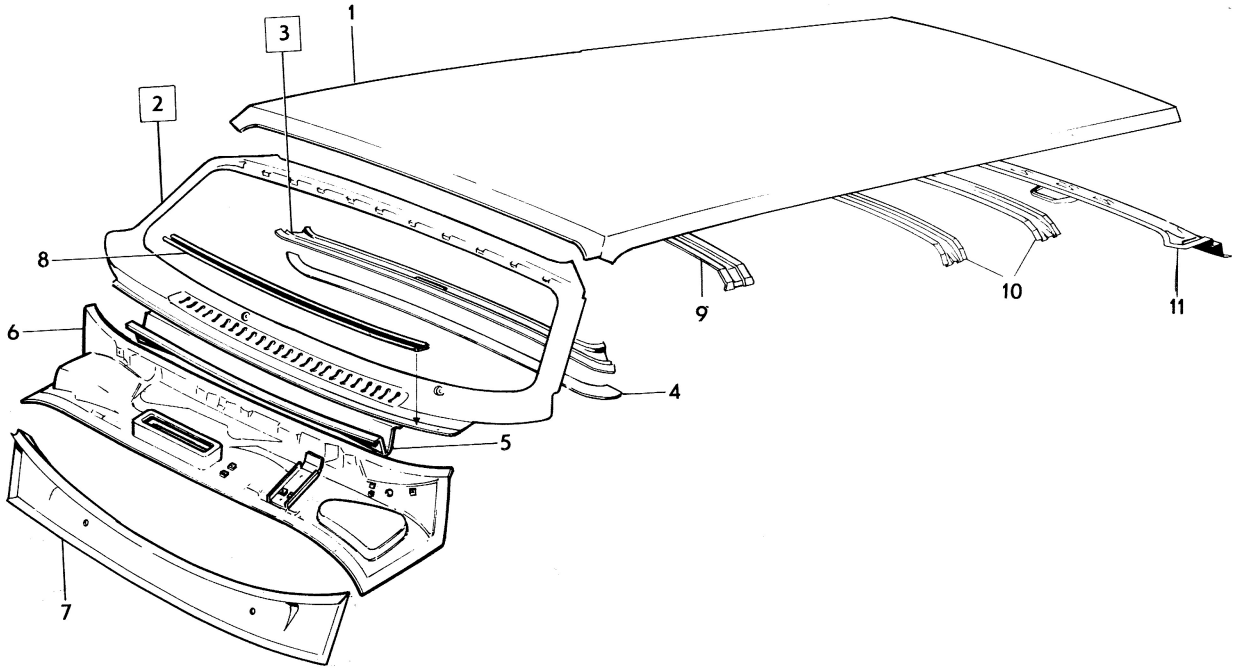

VOLVO PARTS
1 080 11147

Sida / Page	Grupp / Group	Karosseristomme / Body shell	Illustration 11147	0650
42	8	. Takparti, 145 NT / . Roof section, 145 NT	1975-01	

Pos. Fig.	Antal/Quantity				Detalj nr Part No	Benämning	Description	Sats Kit	Anmärkning Notes	
1	1	–	–	–	686005-0	Takplåt	Roof plating			1010
2	1	–	–	–	1211316-3	Vindruteram	Windscreen frame			1020
3	1	–	–	–	686008-4	•Vindrutebalk	•Windscreen member			1030
4	1	–	–	–	676065-6	••Taktygshållare	••Headlining retainer,			1040
						främre	forward			1050
5	1	–	–	–	1213984-6	Skyddsplåt	Protector plate			1060
6	1	–	–	–	1213000-1	Torpedbalk	Cowl member		EXCL AUSTRALIA,	1070
									MALAYSIA,	1071
									SOUTH AFRICA.	1080
	1	–	–	–	1213561-2	Torpedbalk	Cowl member		AUSTRALIA,	1081
									MALAYSIA,	1082
									SOUTH AFRICA.	[illegible]3
7	1	–	–	–	684218-1	Mellanbräda, överdel	Firewall, upper section		EXCL AUSTRALIA,	[illegible]4
									MALAYSIA,	1085
									SOUTH AFRICA.	1086
	1	–	–	–	1213006-8	Mellanbräda, överdel	Firewall, upper section		AUSTRALIA,	1087
									MALAYSIA,	1088
									SOUTH AFRICA.	[illegible]9
8	1200	–	–	–	676082-1	Hållare	Retainer			[illegible]0
9	1	–	–	–	676706-5	Takbåge	Roof arch			1100
10	2	–	–	–	678680-0	Takbåge	Roof arch			1110
11	1	–	–	–	677510-0	Tvärbalk	Cross member			1120