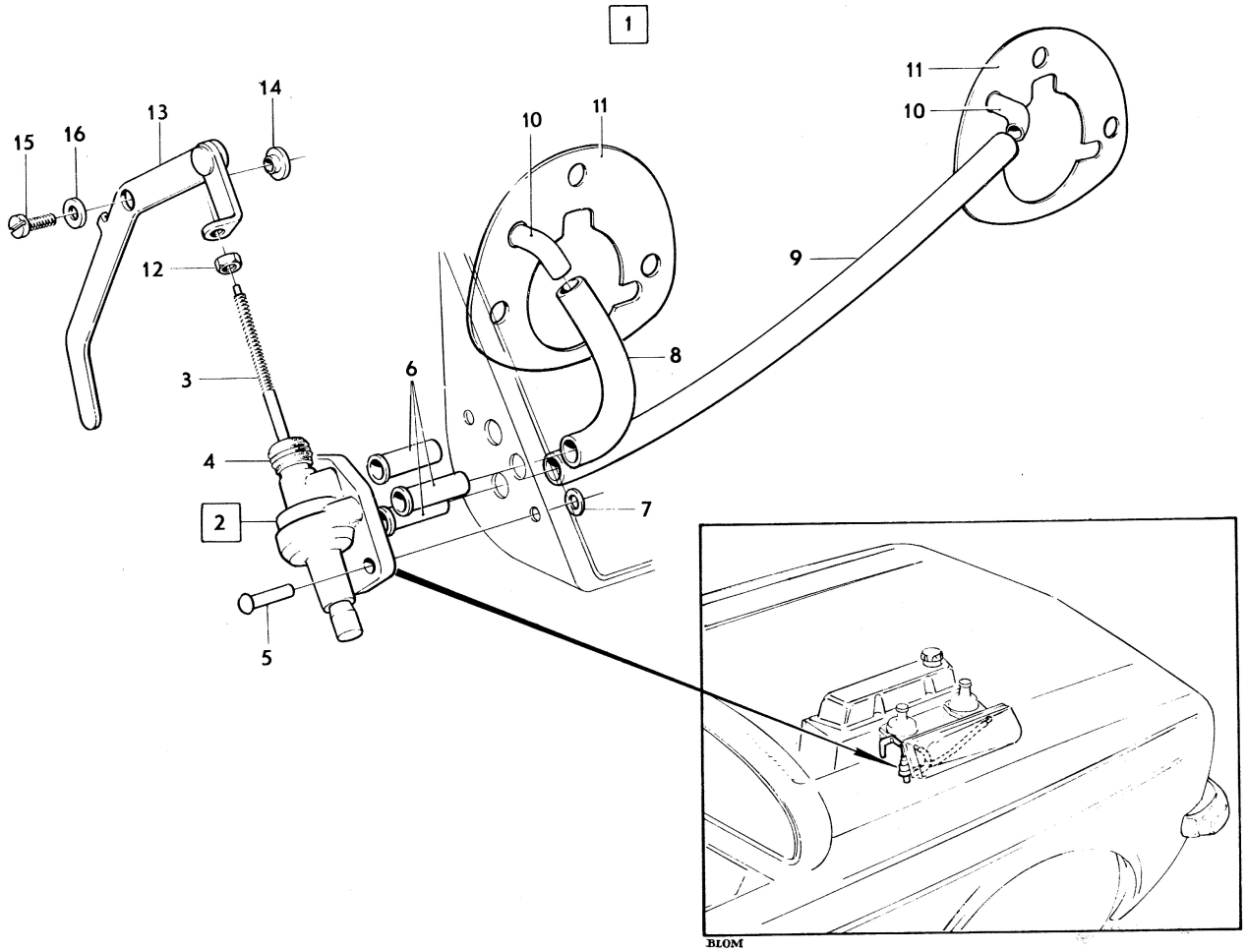

VOLVO PARTS
1 023 10 401

Sida / Page 78 — Grupp / Group 2c — Ventilationsanordning — Ventilation unit — Illustration 10401 — 0950

1975-01

Pos. Fig.	Antal/Quantity				Detalj nr Part No	Benämning	Description	Sats Kit	Anmärkning Notes	
1	–	–	–	–		Ventil med monterings– detaljer	Valve with installation– components	8		1010 1020
2	1	–	–	–	460331-2	•Ventil	•Valve	3		1030
3	1	–	–	–		••Reglerstång	••Control rod	8		1040
4	1	–	–	–	419905-5	••Gummitätning	••Rubber seal	2		1050
5	2	–	–	–	16948-2	•Nit	•Rivet	0		1060
6	3	–	–	–	419864-4	•Slanganslutning	•Hose adepter pipe			1070
7	2	–	–	–	955891-7	•Bricka	•Washer	0		1080
8	65MM	–	–	–	192034-7	•Slang	•Hose	2		1090
9	235	–	–	–	192034-7	•Slang	•Hose	2		1100
10	2	–	–	–	419865-1	•Slanganslutning	•Hose adepter pipe			1110
11	2	–	–	–		•Bricka	•Washer		SE SIDA 80, 1-H11	1[illegible]
12	1	–	–	–	955778-6	•Mutter	•Nut	0		1[illegible]
13	1	–	–	–	460104-3	•Ventilreglage	•Valve conrol	3		1140
14	1	–	–	–	419871-9	•Distansbricka	•Spacer washer			1150
15	1	–	–	–	419872-7	•Skruv	•Screw			1160
16	1	–	–	–	192292-1	•Bricka	•Washer	0		1170