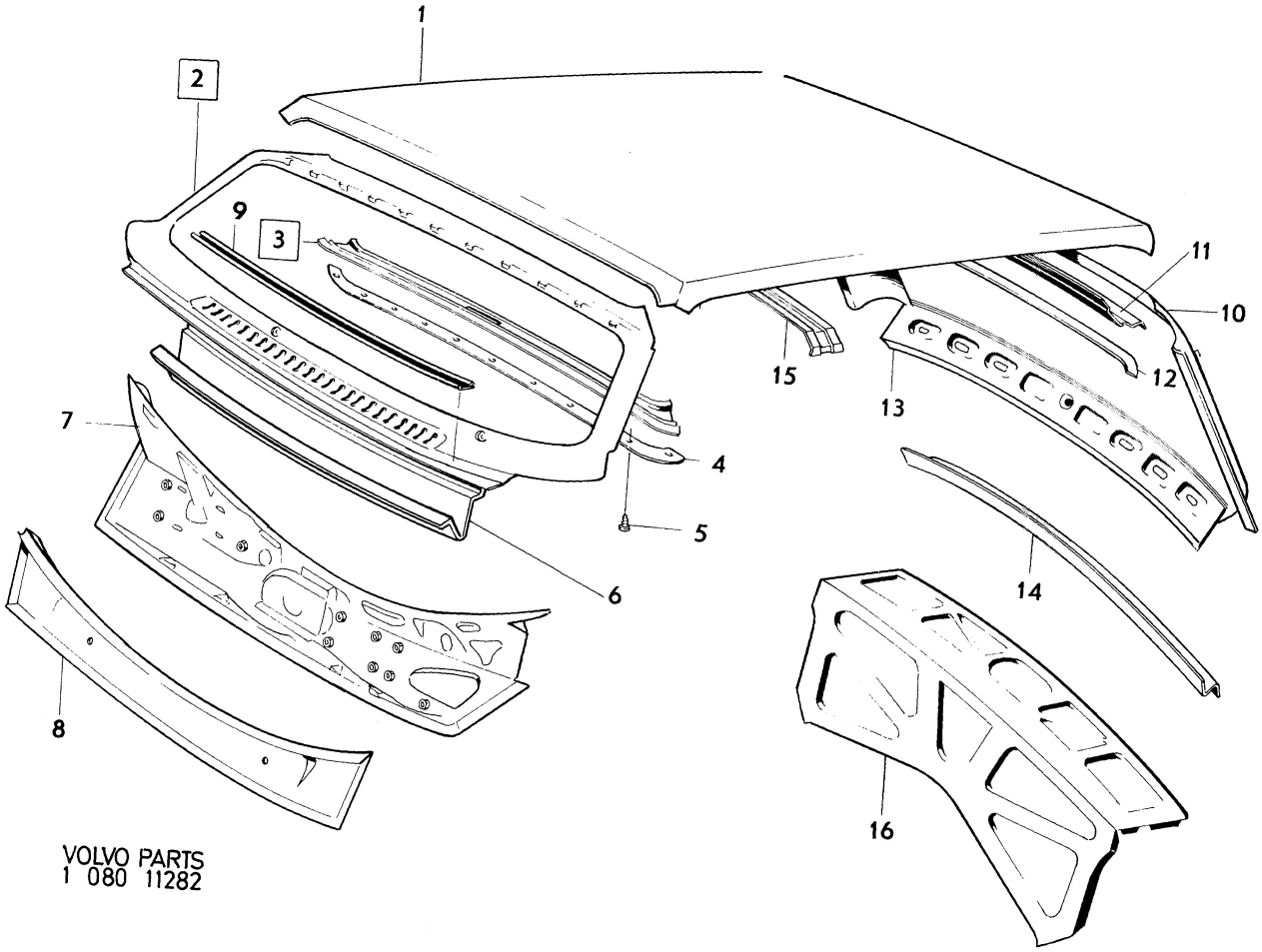

VOLVO PARTS
1 080 11282

Sida / Page	Grupp / Group	Takparti	Roof section	Illustration 11282	0300
18	8			1975-12	

Pos. Fig.	Antal/Quantity				Detalj nr Part No	Benämning	Description	Sats Kit	Anmärkning Notes	
1	1	–	–	–	686007-6	Takplåt	Roof plating		UTL (675297)	1010
	1	–	–	–	686006-8	Takplåt	Roof plating		MTL (679600)	1020
2	1	–	–	–	1211316-3	Vindruteram	Windscreen frame		(682044)	1040
3	1	–	–	–	686008-4	•Vindrutebalk	•Windscreen member		(680710)	1050
4	1	–	–	–	676065-6	••Taktygshållare,	••Headlining retainer,			1060
						främre	forward			1070
5	9	–	–	–	955138-3	••Skruv	••Screw		TID UTF	1080
	2	–	–	–	659654-8	••Nit	••Rivet		TID UTF	1090
6	1	–	–	–	1213984-6	Skyddsplåt	Protector plate		CH 74450–	1100
7	1	–	–	–	675858-5	Torpedbalk	Cowl member		CH –74449	1110
x	1	–	–	–	1202788-4	Torpedbalk	Cowl member		VST CH 74450–.	1120
									HST EXCL AUSTRALIA,	112[illegible]
									MALAYSIA,	11[illegible]
									CH 74450–.	1123
									(1213000).	1124
x	1	–	–	–	1202790-0	Torpedbalk	Cowl member		HST AUSTRALIA,	1150
									MALAYSIA.	1151
									(1213561)	1152
8	1	–	–	–	684218-1	Mellanbräda, överdel	Firewall, upper section		CH –132566,	11[illegible]
									EXCL AUSTRALIA,	116[illegible]
									MALAYSIA.	1162
	1	–	–	–	1213006-8	Mellanbräda, överdel	Firewall, upper section		AUSTRALIA,	1170
									MALAYSIA,	1171
									CH–132566.	1173
	1	–	–	–	1202038-4	Mellanbräda, överdel	Firewall, upper section		CH 132567–.	1176
9	1200	–	–	–	676082-1	Hållare	Retainer			1180
	1	–	–	–	682443-7	Bakruteram, kmpl	Rear window frame, cpl			1190
10	1	–	–	–	682366-0	•Bakruteram	•Rear window frame			1200
11	1	–	–	–	675781-9	•Balk	•Member			1210
12	1	–	–	–	676054-0	•Taktygshållare	•Headlining retainer,			1220
						bakre	rear			1230
13	1	–	–	–		•Balk	•Member	8	CH –12199.	1240
									(675441)	1241
	1	–	–	–		•Balk	•Member	8	CH 12200–	1250
14	1	–	–	–	675958-3	•Balk	•Member		CH –12199	1260
15	1	–	–	–	677571-2	Takbåge	Roof arch		UTL	1270
16	1	–	–	–	675433-7	Hatthylla	Rear shelf			1280