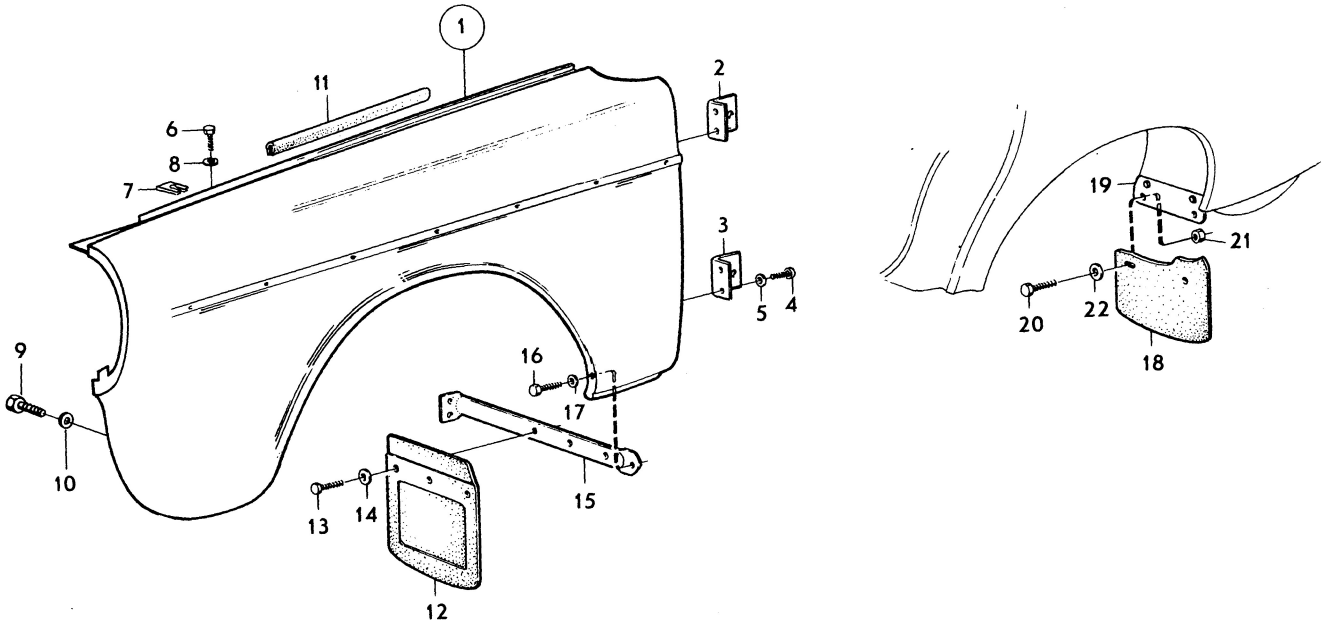

VOLVO
KA 6534

Sida / Page	Grupp / Group	Framskärmar / Front mudguards	Illustration 6534	0050
2	8	främre och bakre stänkskydd / front and rear mudflaps	1975-12	

Pos. Fig.	Antal/Quantity				Detalj nr Part No	Benämning	Description	Sats Kit	Anmärkning Notes	
1	1	–	–	–	1202532-6	Framskärm, V	Front mudguard, L		(678991)	1015
	1	–	–	–	1202533-4	Framskärm, H	Front mudguard, R		(678992)	1025
2	2	–	–	–	676993-9	•Konsol	•Bracket			1027
3	2	–	–	–	677118-2	•Konsol	•Bracket			1030
4	8	–	–	–	945969-4	•Skruv	•Screw		TID UTF. UNC N12.	1040
	8	–	–	–	946699-6	•Skruv	•Screw		SEN UTF. M6.	1050
5	8	–	–	–	192287-1	•Bricka	•Washer			1060
x 6	16	–	–	–	948181-3	Skruv	Bolt	S	1/4–12 ACME X 16	1080
									(941093)	1081
7	12	–	–	–	941962-3	Fjädermutter	Spring nut	S	L 26,2	1090
	4	–	–	–	120408-0	Fjädermutter	Spring nut	0	L 25,8	1100
8	18	–	–	–	192041-2	Bricka	Washer	S	TID UTF	111[illegible]
9	8	–	–	–	955523-6	Skruv	Bolt	S	5/16 UNC X 16	112[illegible]
10	8	–	–	–	960141-0	Bricka	Washer	S		1130
11	2110	–	–	–	679754-2	Kantskyddslist	Edge moulding	S	2 X 1055	1140
12	2	–	–	–	1202235-6	Stänkskydd, främre	Mudflap, forward	1		1150
13	6	–	–	–	960872-0	Skruv	Bolt	0		1160
14	6	–	–	–	960140-2	Bricka	Washer	0		117[illegible]
15	2	–	–	–	678993-7	Stag	Stay	2		11[illegible]
16	6	–	–	–	190364-0	Skruv	Bolt	0		1190
17	6	–	–	–	960140-2	Bricka	Washer	0		1200
x 18	1	–	–	–	675937-7	Stänkskydd, bakre, V	Mudflap, rear, L		CH –102949	1210
									(277955)	1211
	1	–	–	–	1203270-2	Stänkskydd, bakre, V	Mudflap, rear, L		CH 102950–	1213
x	1	–	–	–	675938-5	Stänkskydd, bakre, H	Mudflap, rear, R		CH –102949	1220
									(277956)	1221
	1	–	–	–	1203271-0	Stänkskydd, bakre, H	Mudflap, rear, R		CH 102950–	1223
19	–	–	–	–		Konsol	Bracket		SE SIDA 10	1230
20	4	–	–	–	955513-7	Skruv	Screw		CH–132566.	1240
	4	–	–	–	947612-8	Skruv	Screw		CH 132567–.	1245
21	4	–	–	–	955825-5	Mutter	Nut		CH–132566.	1250
	4	–	–	–	955781-0	Mutter	Nut		CH 132567–.	1255
22	4	–	–	–	960140-2	Bricka	Washer	0		1260
	2	–	–	–	273144-6	Monteringssats för	Front mudguard	1		1270
						framskärm	installation kit			1280