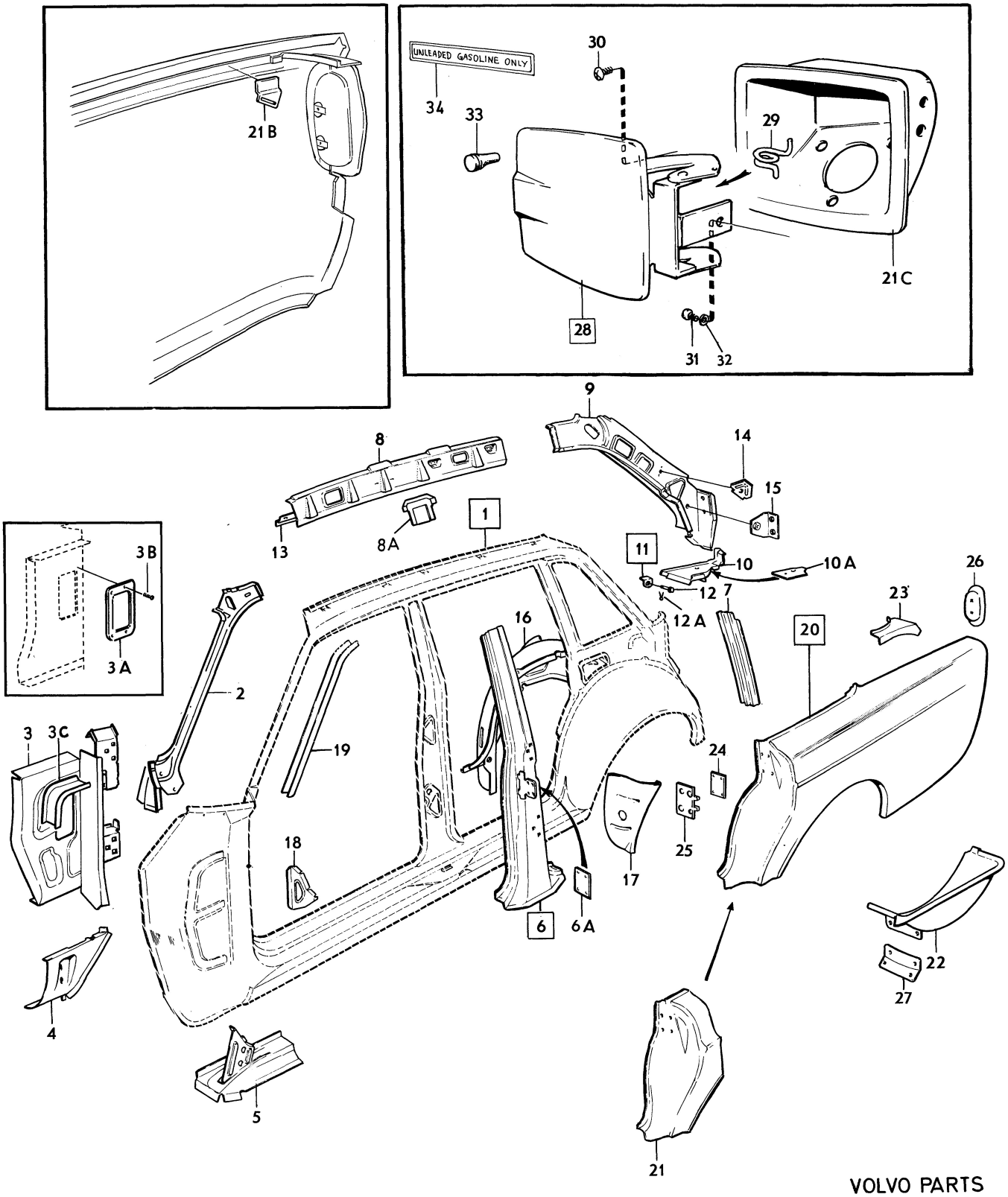

VOLVO PARTS
1 080 15148

Sida 12 Grupp 8 Karossidor Body sides Illustration 15148 0200
Page Group 1975-12

	Pos. Fig.	Antal/Quantity				Detalj nr Part No	Benämning	Description	Sats Kit	Anmärkning Notes	
	1	1	–	–	–		Karossida, V	Body side, L	8		1010
		1	–	–	–		Karossida, H	Body side, R	8		1020
		–	–	–	–		•Det sida 16, 3-A21	•Comps. page 16, 3-A21			1030
	2	1	–	–	–	676092-0	Vindrutestolpe, V	Windscreen pillar, L		CH–74449.	1040
										ERS AV 1ST 1211357–7,	1042
										1ST 676218–1.	1044
		1	–	–	–	1202085-5	Vindrutestolpe, V	Windscreen pillar, L		CH 74450–151858	1055
										(1211357)	1056
x		1	–	–	–	1202766-0	Vindrutestolpe, V	Windscreen pillar, L		CH 151859–	1057
		1	–	–	–	676093-8	Vindrutestolpe, H	Windscreen pillar, R		CH –74449.	1060
										ERS AV 1ST 1211358–5,	1061
										1ST 676219–9.	1062
		1	–	–	–	1211358-5	Vindrutestolpe, H	Windscreen pillar, R		CH 74450–132566.	1[illegible]
		1	–	–	–	1202086-3	Vindrutestolpe, H	Windscreen pillar, R		CH 132567–151858	1075
x		1	–	–	–	1202767-8	Vindrutestolpe, H	Windscreen pillar, R		CH 151859–	1077
x	3	1	–	–	–	1202083-0	Torpedsida, inre, V	Cowl side, inner, L		(675823)	1080
x		1	–	–	–	1202084-8	Torpedsida, inre, H	Cowl side, inner, R		(675824)	1090
	3a	1	–	–	–	1211668-7	Täckplåt	Cover plate		CH 74450–	1100
	3b	4	–	–	–	955138-3	Skruv	Screw		CH 74450–	1[illegible]
	3c	1	–	–	–	675453-5	•Avrinningsplåt, H	•Drain trough, R		CH–74449.	1115
	4	1	–	–	–	675244-8	Knutplåt, V	Tie plate, L			1120
		1	–	–	–	675245-5	Knutplåt, H	Tie plate, R			1130
	5	1	–	–	–	676159-7	Täckplåt, V	Escutcheon plate, L			1140
		1	–	–	–	676160-5	Täckplåt, H	Escutcheon plate, R			1150
	6	1	–	–	–	675825-4	Mellanstolpe,	Centre pillar,		CH –151858	1160
							främre, yttre, V	forward, outer, L			1170
x		1	–	–	–	1202872-6	Mellanstolpe,	Centre pillar,		CH 151859–	1175
							främre, yttre, V	forward, outer, L			1176
		1	–	–	–	675826-2	Mellanstolpe,	Centre pillar,		CH –151858	1180
							främre, yttre, H	forward, outer, R			1190
x		1	–	–	–	1202873-4	Mellanstolpe,	Centre pillar,		CH 151859–	1195
							främre, yttre, H	forward, outer, R			1196
	6a	2	–	–	–	685617-3	•Mutterplatta	•Nut plate		CH –136224	1200
x		2	–	–	–	1203989-7	•Mutterplatta	•Nut plate		CH 136225–	1205
										ALT 1. UNC1/4''.	1206
		2	–	–	–		•Mutterplatta	•Nut plate	8	CH 136225–	1207
										ALT 2. M6.	1208
	7	1	–	–	–	675557-3	Mellanstolpe, bakre, V	Centre pillar, rear, L			1210
		1	–	–	–	675558-1	Mellanstolpe, bakre, H	Centre pillar, rear, R			1220
	8	1	–	–	–	680214-4	Taksvällare,	Cant rail,			1[illegible]
							främre, inre, V	forward, inner, L			1240
		1	–	–	–	680215-1	Taksvällare,	Cant rail,			1250
							främre, inre, H	forward, inner, R			1260
	8a	2	–	–	–	679718-7	Förstärkning	Reinforcement			1265
	9	1	–	–	–	675972-4	Taksvällare,	Cant rail,			1270
							bakre, inre, V	rear, inner, L			1[illegible]
		1	–	–	–	675973-2	Taksvällare,	Cant rail,			12[illegible]
							bakre, inre, H	rear, inner, R			1300
	10	1	–	–	–	682379-3	Hylla, ytterdel, V	Shelf, outer section, L		(675448)	1310
		1	–	–	–	682380-1	Hylla, ytterdel, H	Shelf, outer section, R		(675449)	1320
	10a	1	–	–	–	1211935-0	Förstärkning, V	Reinforcement, L			1330
		1	–	–	–	1211936-8	Förstärkning, H	Reinforcement, R			1340
	11	2	–	–	–	678026-6	Konsol för gasfjäder	Bracket for gas spring			1350
	12	2	–	–	–	913114-5	•Saxpinnebult	•Clevis pin		TID UTF	1360
	12a	2	–	–	–	907824-7	•Saxpinne	•Split pin		TID UTF	1370
		2	–	–	–	945732-6	•Rörpinne	•Pin		SEN UTF	1380
	13	1	–	–	–	676076-3	Taktygshållare, V	Head lining retainer, L			1390
		1	–	–	–	676077-1	Taktygshållare, H	Head lining retainer, R			1400
	14	2	–	–	–	685634-8	Mutterplatta,	Nut plate,		(679993)	1421
							säkerhetsbälte	safety belt			1422
	15	2	–	–	–	675451-9	Mutterplatta,	Nut plate, luggage		CH–132566	1430
							gångjärn för baklucka	compartment hinge			1440

Sida 14 Grupp 8 Karossidor Body sides Illustration 15148 0200
Page Group 1975-12

Pos. Fig.	Antal/Quantity				Detalj nr Part No	Benämning	Description	Sats Kit	Anmärkning Notes	
	2	–	–	–	1202088-9	Mutterplatta, gångjärn för baklucka	Nut plate, luggage compartment hinge		CH 132567–	1445 1450
16	1	–	–	–	675827-0	Hjulhus, bakre, inre, V	Wheel housing, rear, inner, L			2010 2020
	1	–	–	–	675828-8	Hjulhus, bakre, inre, H	Wheel housing, rear, inner, R			2030 2040
17	1	–	–	–	675255-4	Gavelplåt, V	End plate, L			2050
	1	–	–	–	675256-2	Gavelplåt, H	End plate, R			2060
18	4	–	–	–	675445-1	Mellanlägg	Bulk head			2070
19	1	–	–	–	1203469-0	Dropplist, V	Drip moulding, L		(675853)	2083
	1	–	–	–	675854-4	Dropplist, H	Drip moulding, R		CH –102949	2090
	1	–	–	–	1203470-8	Dropplist, H	Drip moulding, R		CH 102950–	2[illegible]
	–	–	–	–		Bakskärm, V	Rear mudguard, L	8		2[illegible]
	–	–	–	–		Bakskärm, H	Rear mudguard, R	8		2110
20	1	–	–	–	675459-2	•Bakskärm, V	•Rear mudguard, L			2120
	1	–	–	–	675460-0	•Bakskärm, H	•Rear mudguard, R		CH –102949. ERS AV 1 ST 1203198–5 1 ST 1213660–2.	2130 2131 2[illegible]
	1	–	–	–	1213423-5	•Bakskärm, H	•Rear mudguard, R		CH 102950–	2[illegible]
21	1	–	–	–	678228-8	••Bakskärm, främre del, V	••Rear mudguard, forward section, L			2140 2150
	1	–	–	–	678229-6	••Bakskärm, främre del, H	••Rear mudguard, forward section, R			2160 2170
21b	1	–	–	–	687170-1	•Remfäste	•Strap anchorage		CH –102949	2180
	1	–	–	–	1213978-8	•Remfäste	•Strap anchorage		CH 102950–	2183
21c	1	–	–	–	1211214-0	•Påfyllningshus	•Filler housing		CH 102950–	2186
22	1	–	–	–	675743-9	•Reservhjulsbalja, yttre, V	•Spare wheel container, outer, L		CH –102949	2190 2200
	1	–	–	–	1213098-5	•Reservhjulsbalja yttre, V	•Spare wheel container, outer, L		CH 102950–	2203 2205
	1	–	–	–	675744-7	•Reservhjulsbalja, yttre, H	•Spare wheel container, outer, R		CH –102949	2210 2220
	1	–	–	–	1213099-3	•Reservhjulsbalja yttre, H	•Spare wheel container, outer, R		CH 102950–	2223 2225
23	1	–	–	–	675472-5	•Knutplåt, V	•Tie plate, L		CH –102949	2230
	1	–	–	–	1203179-5	•Knutplåt, V	•Tie plate, L		CH 102950–	2233
	1	–	–	–	675473-3	•Knutplåt, H	•Tie plate, R		CH –102949	2240
	1	–	–	–	1203180-3	•Knutplåt, H	•Tie plate, R		CH 102950–	2243
24	2	–	–	–	676135-7	•Mutterplatta	•Nut plate			2[illegible]
	2	–	–	–	685617-3	•Mutterplatta	•Nut plate		CH 74450–132566.	2[illegible]
	2	–	–	–	1202089-7	•Mutterplatta	•Nut plate		CH 132567–.	2265
25	2	–	–	–	1211033-4	•Förstärkningsplåt	•Reinforcing plate		(675997)	2280
26	1	–	–	–	676034-2	•Kåpa, V	•Casing, L		CH –74449	2290
	1	–	–	–	676035-9	•Kåpa, H	•Casing, R		CH –74449	2300
27	2	–	–	–	675936-9	•Konsol	•Bracket			2[illegible]
28	1	–	–	–	1213881-4	Lucka	Cover		CH 102950–	2[illegible]
x 29	1	–	–	–	1203473-2	•Fjäder, övre	•Spring, upper		CH 102950– (1213835)	2330 2335
x	1	–	–	–	1203473-2	•Fjäder, nedre	•Spring, lower		CH 102950– (1213836)	2340 2345
30	2	–	–	–	946832-3	Skruv	Screw		CH 102950–	2350
31	1	–	–	–	191390-4	Skruv	Screw		CH 102950–	2360
32	1	–	–	–	960138-6	Bricka	Washer		CH 102950–	2370
33	2	–	–	–	1203178-7	Buffert	Buffer		CH 102950–	2380
x 34	1	–	–	–	1202852-8	Skylt /unleaded gasoline only/	Plate /unleaded gasoline only/		CALIFORNIA	2385 2386