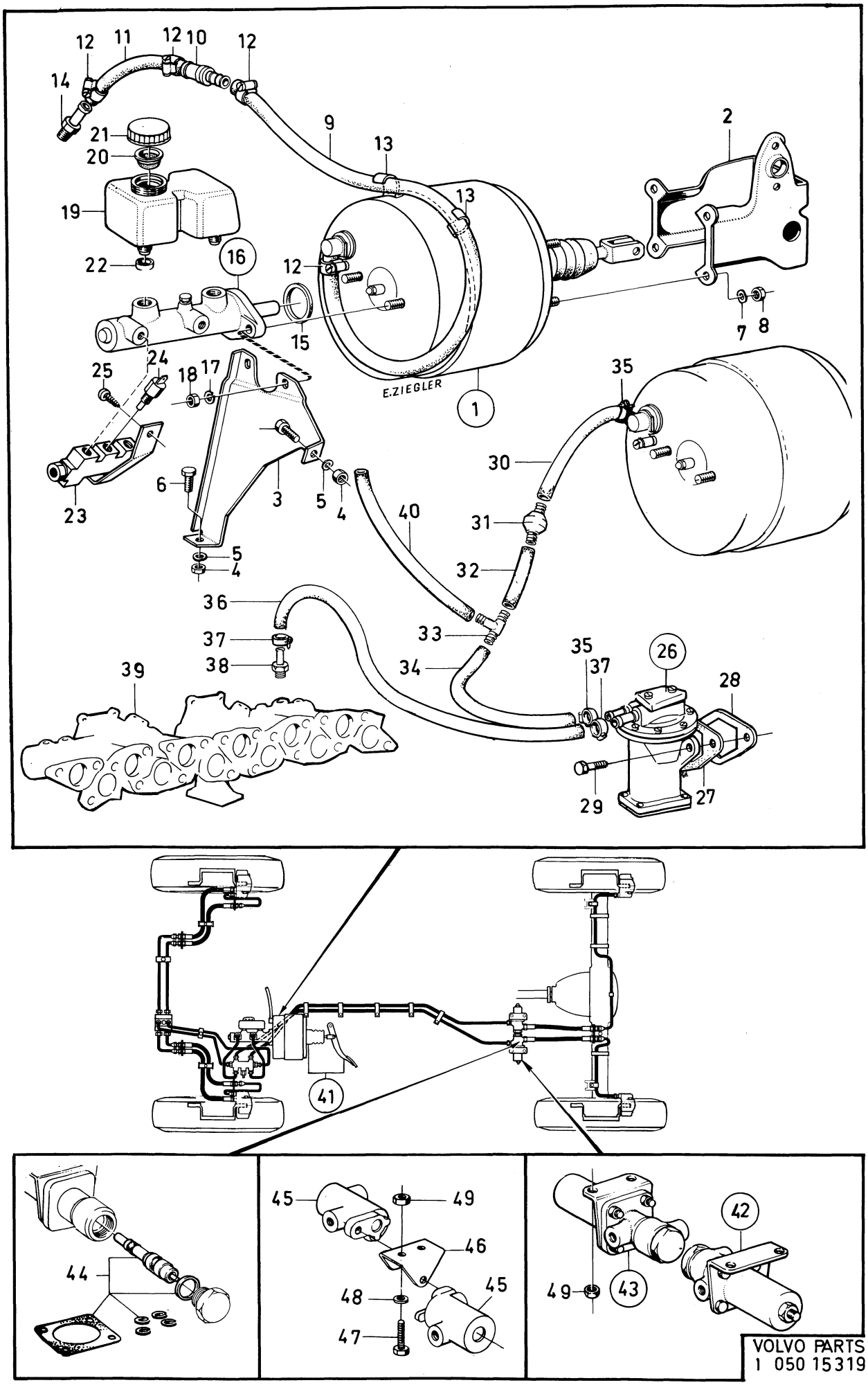

VOLVO PARTS
1 050 15319

Sida 16 Grupp 5 Komplettenheter Complete units Illustration 15319 0300
Page Group 1975-12

Pos. Fig.	Antal/Quantity VST	HST			Detalj nr Part No	Benämning	Description	Sats Kit	Anmärkning Notes	
1	1	1	–	–	678920-0	Vakuumbromscylinder	Vacuum brake cylinder	3		1010
	–	–	–	–		•Det sida 34, 2-H19	•Comps. page 34, 2-H19			1020
2	–	1	–	–		Konsol	Bracket		SE SIDA 38, 2-H23	1030
3	–	1	–	–	680121-1	Stöd	Support			1040
4	–	2	–	–	941140-6	Mutter	Nut	0		1050
5	–	2	–	–	192287-1	Bricka	Washer	0		1060
6	–	2	–	–	955513-7	Skruv	Screw	0		1070
7	4	4	–	–	941907-8	Fjädrande bricka	Spring washer	0		1080
8	4	4	–	–	955847-9	Mutter	Nut	0		1090
9	890	890	–	–	947922-1	Gummislang	Rubber hose		(493211) B30A.	1100
									CH–132566	1105
	725	725	–	–	947922-1	Gummislang	Rubber hose		B30E. CH–132566	1110
10	1	1	–	–	680476-9	Backventil	Check valve		CH–132566	11[illegible]
11	100	100	–	–	947922-1	Gummislang	Rubber hose		B30A. CH–132566	1130
	350	350	–	–	947922-1	Gummislang	Rubber hose		B30E. CH–132566	1135
12	4	4	–	–	945754-0	Slangklammer	Hose clip		CH–132566	1140
13	1	1	–	–	943423-4	Klammer	Clip		CH–132566	1150
14	1	1	–	–	943199-0	Nippel	Nipple		CH–132566	1160
15	1	1	–	–	680906-5	Gummiring	Rubber ring	S		11[illegible]
16	1	1	–	–	678921-8	Tandemhuvudcylinder	Tandem master cylinder		15/16'' CH–79021. ERS	1180
									AV 1 ST 673766–2.	1185
	1	1	–	–	673766-2	Tandemhuvudcylinder	Tandem master cylinder		7/8'' CH 79022–.	1190
	–	–	–	–		•Det sida 32, 2-H17	•Comps. page 32, 2-H17			1195
17	2	2	–	–	955921-2	Fjäderbricka	Spring washer	0		1200
18	2	2	–	–	955782-8	Mutter	Nut	0		1210
19	1	1	–	–	680548-5	Bromsvätskebehållare	Brake fluid container		ERS AV 1 ST 1221465–6	1220
	1	1	–	–		•Behållare	•Container	8		1230
20	1	1	–	–	681659-9	•Sil	•Filter			1240
21	1	1	–	–	681660-7	•Lock	•Filter cap			1250
22	2	2	–	–	678237-9	Muff	Connector			1260
23	1	1	–	–	680635-0	Varningsventil	Warning valve	3		1270
24	1	–	–	–	679938-1	Kontakt	Contact	2		1280
25	1	1	–	–	958246-1	Skruv	Screw			1290
26	1	1	–	–	1221824-4	Vacuumpump	Vacuumpump		CH 132567–.	1291
	–	–	–	–		•Det sida 36, 2-H21	•Comps. page 36, 2-H21			1292
27	2	2	–	–	1218517-9	Packning	Gasket		CH 132567–.	1293
28	1	1	–	–	1218534-4	Mellanlägg	Spacer		CH 132567–.	1294
29	2	2	–	–	940135-7	Skruv	Screw		CH 132567–.	1295
30	110	110	–	–	947908-0	Gummislang	Rubber hose		CH 132567–.	1296
31	1	1	–	–	1228272-9	Backventil	Check valve		CH 132567–.	12[illegible]
32	60MM	60MM	–	–	947908-0	Gummislang	Rubber hose		CH 132567–.	1300
33	1	1	–	–	1221906-9	T–rör	T–tube		CH 132567–.	1310
34	370	370	–	–	947908-0	Gummislang	Rubber hose		CH 132567–.	1320
35	2	2	–	–	943471-3	Slangklammer	Hose clip		CH 132567–.	1330
36	815	815	–	–	947922-1	Gummislang	Rubber hose		CH 132567–.	1340
37	2	2	–	–	943472-1	Slangklammer	Hose clips		CH 132567–.	13[illegible]
38	1	1	–	–		Nippel	Nipple		SE POS 14	1360
39	1	1	–	–		Insugningsrör	Induction manifold		SE GRUPP 2A	1370
40	1	1	–	–		Gummislang	Rubber hose		SE GRUPP 9	1375
41	1	1	–	–		Bromspedal med	Brakepedal with install–		SE SIDA 38, 2-H23	1380
						monteringsdetaljer	ation components			1385
42	1	1	–	–	680344-9	Bromsventil, V	Brake valve, L		CH–12199	1390
	1	1	–	–	677588-6	Bromsventil, V	Brake valve, L		CH 12200–74449.	1395
43	1	1	–	–	680345-6	Bromsventil, H	Brake valve, R		CH–12199	1400
	1	1	–	–	677589-4	Bromsventil, H	Brake valve, R		CH 12200–74449	1410
44	1	1	–	–	273090-1	•Reparationssats	•Repair kit			1420
45	2	2	–	–	1212476-4	Bromsventil	Brake valve		CH 74450–132566.	1430
	2	2	–	–	1205899-6	Bromsventil	Brake valve		CH 132567–.	1440
46	1	1	–	–	1212232-1	Konsol	Bracket		CH 74450–132566.	1450
	1	1	–	–	1221757-6	Konsol	Bracket		CH 132567–.	1460
47	2	2	–	–	940113-4	Skruv	Screw		CH 74450–132566.	1470
	2	2	–	–	940199-3	Skruv	Screw		CH 132567–.	1480
48	2	2	–	–	941907-8	Fjädrande bricka	Resilient washer		CH 74450–.	1490

Sida / Page	Grupp / Group	Komplettenheter	Complete units	Illustration 15319	0300
18	5			1975-12	

Pos. Fig.	Antal/Quantity VST	HST			Detalj nr Part No	Benämning	Description	Sats Kit	Anmärkning Notes	
49	4	4	–	–	950353-3	Mutter	Nut		CH–74449.	1500
	2	2	–	–	950353-3	Mutter	Nut		CH 74450–132566.	1510
	2	2	–	–	963106-0	Mutter	Nut		CH 132567–.	1520