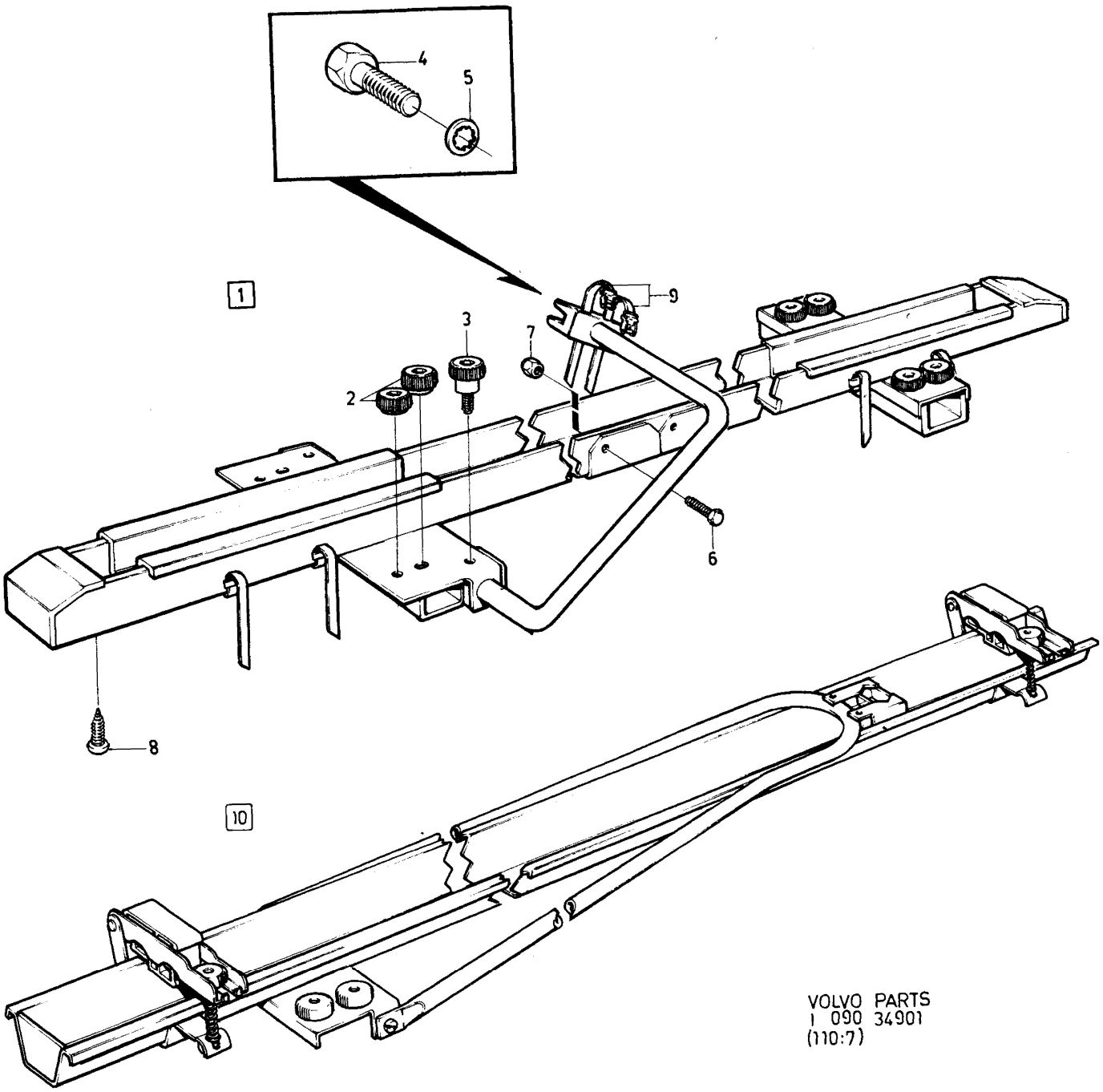


VOLVO PARTS
1 090 34901
(110:7)

| Sida Page | Grupp Group | Cykelställ | Cycle stand | Illustration | 1680 |
|---|---|---|---|---|---|
| 168 | 9 | | | 34901 1984-12 | |

| Pos. Fig. | Antal/Quantity | | | | Artikel nr Part No | Benämning | Description | Sats Kit | B P S R | Anmärkning Notes | |
|---|---|---|---|---|---|---|---|---|---|---|---|
| 1 | 1 | - | - | - | 1129282-8 | Cykelställ kmpl | Cycle stand cpl | | 8 | ERS AV 1ST 1333753-0 | 0020 |
| 2 | 8 | - | - | - | 1304732-9 | •Ratt | •Knob | | 5 | | 0040 |
| 3 | 2 | - | - | - | 1304733-7 | •Ratt | •Knob | | 5 | | 0060 |
| 4 | 1 | - | - | - | 940199-3 | •Skruv | •Screw | | 2 | | 0080 |
| 5 | 1 | - | - | - | 955949-3 | •Taggbricka | •Barbed washer | | 2 | | 0100 |
| 6 | 8 | - | - | - | 955268-8 | •Skruv | •Screw | | 2 | | 0120 |
| 7 | 8 | - | - | - | 955781-0 | •Mutter | •Nut | | 2 | | 0140 |
| 8 | 2 | - | - | - | 955129-2 | •Skruv | •Screw | | 2 | | 0160 |
| 9 | 2 | - | - | - | 1304976-2 | •Spännband | •Tape | | 5 | | 0180 |
| | - | - | - | - | | | | | | | 0200 |
| 10 | 1 | - | - | - | 1333753-0 | Cykelställ kmpl | Cycle stand cpl | | 3 | | 0240 |