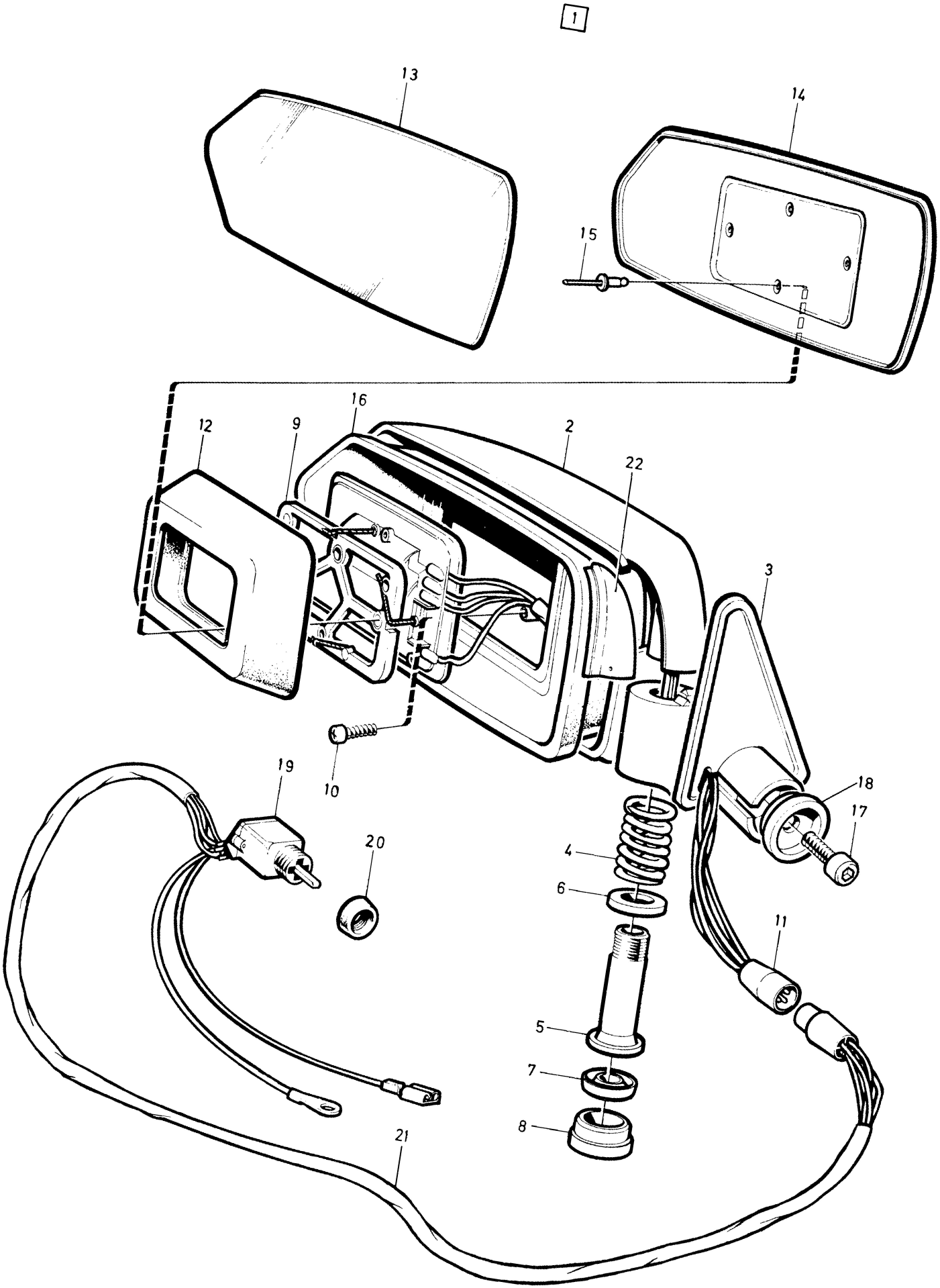
1
13
14
15
16
12
9
2
22
3
10
19
18
17
20
4
6
11
5
7
8
21

A
B
C
D
E

DOOR MIRRORS ELECTRICALLY OPERATED

UTVÄNDIG BACKSPEGEL, ELDRIVEN

-1985

Fig	Part No. Artikel nr	Quantity /Antal A	B	C	D	E	PS	Description	Benämning	Notes Anmärkning	SR
1	1129250-5	1	-	-	-	-		Rear view mirror, l.h. convex glass	Backspegel, v konvext glas	L.H.D, EXC (J)	6
	1129251-3	1	-	-	-	-		Rear view mirror, r.h. convex glass	Backspegel, h konvext glas	L.H.D, EXC (J)	6
	1129252-1	1	-	-	-	-		Rear view mirror, l.h. convex glass	Backspegel, v konvext glas	R.H.D, EXC (AUS)(J)	6
	1129253-9	1	-	-	-	-		Rear view mirror, r.h. convex glass	Backspegel, h konvext glas	R.H.D, EXC (AUS)(J)	6
	1304111-6	1	-	-	-	-		Rear view mirror, l.h. convex glass	Backspegel, v konvext glas	R.H.D (J).	2
	1304112-4	1	-	-	-	-		Rear view mirror, r.h. convex glass	Backspegel, h konvext glas	R.H.D (J).	2
	1304125-6	1	-	-	-	-		Rear view mirror, l.h. flat glass	Backspegel, v plant glas	(AUS)	
	1304126-4	1	-	-	-	-		Rear view mirror, r.h. flat glass	Backspegel, h plant glas	(AUS)	
2		1	-	-	-	-	NS	• Mirror casing	• Spegelkåpa		
3	1254634-7	1	-	-	-	-		• Mirror base, l.h.	• Spegelfot, v		
	1254635-4	1	-	-	-	-		• Mirror base, r.h.	• Spegelfot, h		
4	1321081-0	2	-	-	-	-		• Compression spring	• Tryckfjäder		
5		2	-	-	-	-	NS	• Sleeve	• Hylsa		
6	1321080-2	2	-	-	-	-		• Centering washer	• Centrerbricka		
7	1254712-1	2	-	-	-	-		• Sealing ring	• Tätningsring		
8	1254797-2	2	-	-	-	-		• Plastic plug	• Plastplugg		
9	1304131-4	2	-	-	-	-		• Drive unit	• Drivenhet		
10	956060-8	4	-	-	-	-		• Screw	• Skruv		
11	945828-2	2	-	-	-	-		• Pin housing	• Stiftisolator		
12	1254005-0	2	-	-	-	-		• Rubber bellows	• Gummibälg		
13	1255982-9	1	-	-	-	-		• Mirror glass, l.h. convex glass	• Spegelglas, v konvext glas		
	1255983-7	1	-	-	-	-		• Mirror glass, r.h. convex glass	• Spegelglas, h konvext glas		
	1255986-0	1	-	-	-	-		• Mirror glass, l.h. convex glass	• Spegelglas, v konvext glas	(J)	
	1255987-8	1	-	-	-	-		• Mirror glass, r.h. convex glass	• Spegelglas, h konvext glas	(J)	
	1255984-5	1	-	-	-	-		• Mirror glass, l.h. flat glass	• Spegelglas, v plant glas	(AUS)	
	1255985-2	1	-	-	-	-		• Mirror glass, r.h. flat glass	• Spegelglas, h plant glas	(AUS)	
14	1254679-2	1	-	-	-	-		• Mirror disc, l.h.	• Spegeltallrik, v		
	1254716-2	1	-	-	-	-		• Mirror disc, r.h.	• Spegeltallrik, h		
15		4	-	-	-	-	NS	• Pop rivet	• Popnit	3x4.5	
16	1254638-8	1	-	-	-	-		• Protecting casing, l.h.	• Skyddskåpa, v		
	1254639-6	1	-	-	-	-		• Protecting casing, r.h.	• Skyddskåpa, h		
17	959219-7	2	-	-	-	-		Screw	Skruv		
18	1254444-1	2	-	-	-	-		Washer	Bricka		
19	1235091-4	1	-	-	-	-		Switch	Strömställare		
20	1235101-1	1	-	-	-	-		Nut	Mutter		2
21	1247995-2	1	-	-	-	-		Cable harness	Ledningsmatta		3
22		1	-	-	-	-	NS	Cover	Täcklock		
		1	-	-	-	-	NS	Cover	Täcklock		