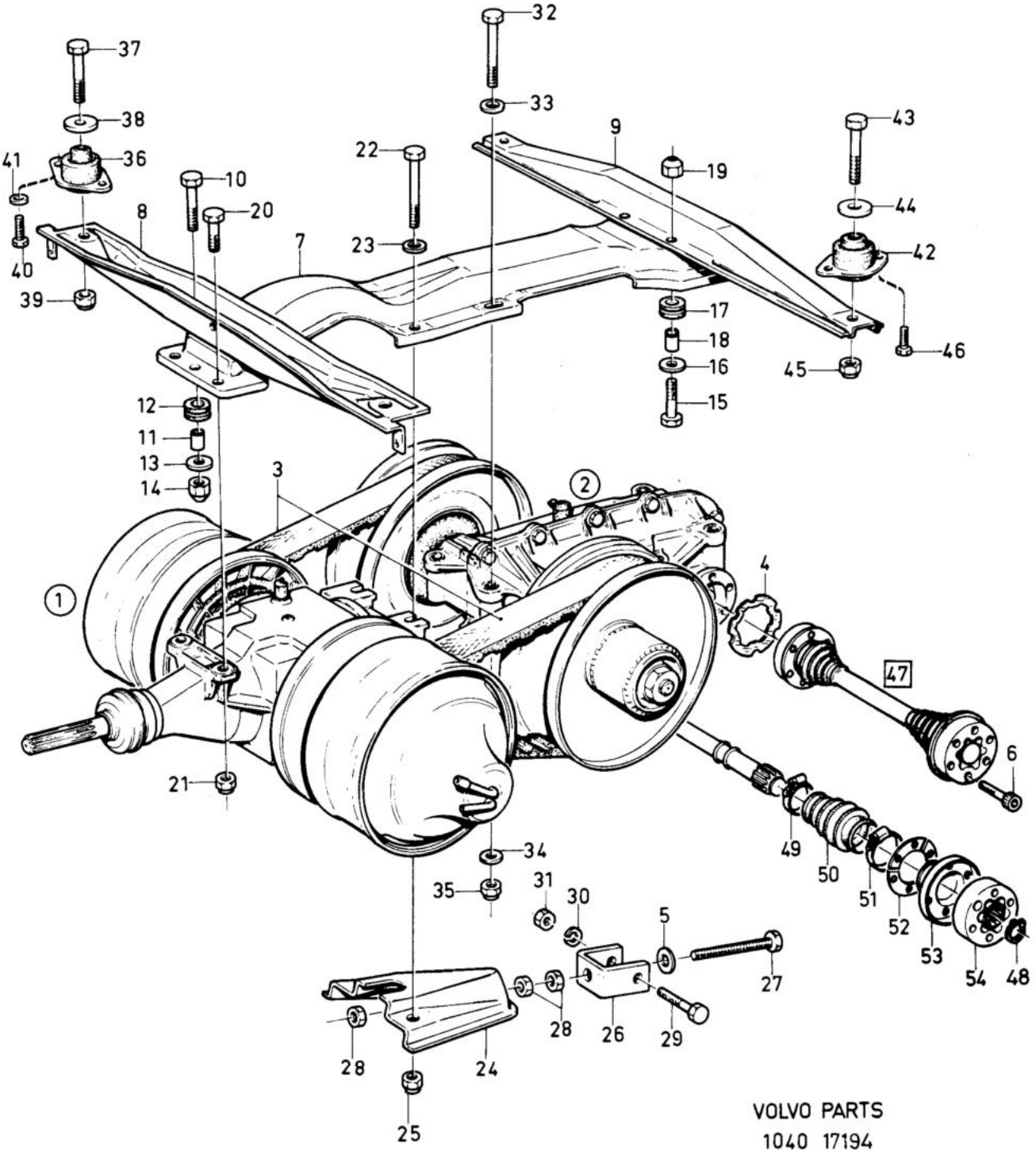

VOLVO PARTS
1040 17194

Sida Page	Grupp Group	Kontinuerligt variabel transmission (CVT)	Continuously variable transmission (CVT)	Illustration	0250
16	4			17194 1984-12	

Pos. Fig.	Antal/Quantity				Artikel nr Part No	Benämning	Description	Sats Kit	B P S R	Anmärkning Notes	
1	1	-	-	-	3294150-2	CVT, primär	CVT, primary		5		0020
	1	-	-	-	5001690-6	CVT, primär, bytesutförande	CVT, primary exchange model		9		0030 0035
	-	-	-	-		•Det se sida 24, 2-B01	•Comps page 24, 2-B01				0040
2	1	-	-	-	3294155-1	CVT, sekundär	CVT, secondary		5		0060
	1	-	-	-	5001691-4	CVT, sekundär bytesutförande	CVT, secondary, exchange model		9		0070 0075
	-	-	-	-		•Det se sida 44, 2-B21	•Comps page 44, 2-B21				0080
3	1	-	-	-	3266545-7	Drivremsats	Drive belt set		2		0180
4	4	-	-	-	3293186-7	Packning	Packing		1		0200
5	1	-	-	-	3291567-0	Bricka	Washer		3		022[illegible]
6	24	-	-	-	3298462-7	Skruv	Screw		2	(3298200)	0240
7	1	-	-	-	3292268-4	Balk	Member		4		0260
8	1	-	-	-	3294451-4	Tvärbalk	Cross member		4	(3291900)	0320
9	1	-	-	-	3291901-1	Tvärbalk	Cross member		5		0340
10	3	-	-	-	940142-3	Skruv	Screw		2		0360
11	2	-	-	-	3291899-7	Bussning	Bushing		3		038[illegible]
12	2	-	-	-	3292357-5	Gummifjädring	Rubber mounting		2		040[illegible]
13	2	-	-	-	3105265-7	Bricka	Washer		3		0440
14	2	-	-	-	946036-1	Mutter	Nut		2		0460
15	4	-	-	-	940142-3	Skruv	Screw		2		0480
16	4	-	-	-	3105265-7	Bricka	Washer		3		0500
17	2	-	-	-	3291905-2	Gummifjädring	Rubber mounting		6		0520
18	4	-	-	-	3291899-7	Bussning	Bushing		3		0560
19	4	-	-	-	946036-1	Mutter	Nut		2		0580
20	2	-	-	-	955297-7	Skruv	Screw		2		0600
21	2	-	-	-	946036-1	Mutter	Nut		2		0620
22	2	-	-	-	955305-8	Skruv	Screw		2		0640
23	2	-	-	-	3291748-6	Bricka	Washer		2		0660
24	1	-	-	-	3290833-7	Konsol	Bracket		4		0680
25	2	-	-	-	946036-1	Mutter	Nut		2		0700
26	1	-	-	-	3290682-8	Konsol	Bracket		2		0720
27	1	-	-	-	3270036-1	Skruv	Screw		2		0740
28	3	-	-	-	955784-4	Mutter	Nut		2		0760
29	1	-	-	-	3291371-7	Skruv	Screw		2		0780
30	1	-	-	-	955922-0	Bricka	Washer		2		0800
31	1	-	-	-	963915-4	Mutter	Nut		2		0820
32	4	-	-	-	955282-9	Skruv	Screw		2		084[illegible]
33	2	-	-	-	3291748-6	Bricka	Washer		2		086[illegible]
34	2	-	-	-	955894-1	Bricka	Washer		2		0880
35	2	-	-	-	946036-1	Mutter	Nut		2		0900
36	2	-	-	-	3293245-1	Gummikudde	Rubber mounting		2		0920
37	2	-	-	-	3105572-6	Skruv	Screw		2		0940
38	2	-	-	-	3105573-4	Bricka	Washer		3		096[illegible]
39	2	-	-	-	963921-2	Nut	Nut		2		098[illegible]
40	4	-	-	-	955297-7	Skruv	Screw		2		1000
41	4	-	-	-	955921-2	Fjäderbricka	Spring washer		2		1020
42	2	-	-	-	3293246-9	Gummikudde	Rubber mounting		2		1040
x 43	2	-	-	-	3270454-6	Skruv	Screw		3	(3105575)	1060
44	2	-	-	-	3105576-7	Bricka	Washer		2		1080
45	2	-	-	-	963921-2	Nut	Nut		2		1100
46	4	-	-	-	955297-7	Skruv	Screw		2		1120
47	2	-	-	-	3280089-8	Drivaxel	Drive shaft		3	(3266546)	1140
48	4	-	-	-	3104765-7	•Låsring	•Circlip		2	(3266546)	1160
49	4	-	-	-	3267227-1	•Slangklammer	•Hose clamp		2		1180
50	4	-	-	-	3284415-1	•Skyddsmuff	•Concertina		2	(3103799)	1200
51	4	-	-	-	3266980-6	•Slangklammer	•Hose clamp		2		1220
52	12	-	-	-	3103797-1	•Platta	•Plate		3		1240
53	4	-	-	-	3103796-3	•Kåpa	•Cap		4		1260
54	4	-	-	-	3103795-5	•Drivknut	•Homokinetic joint		4		1280