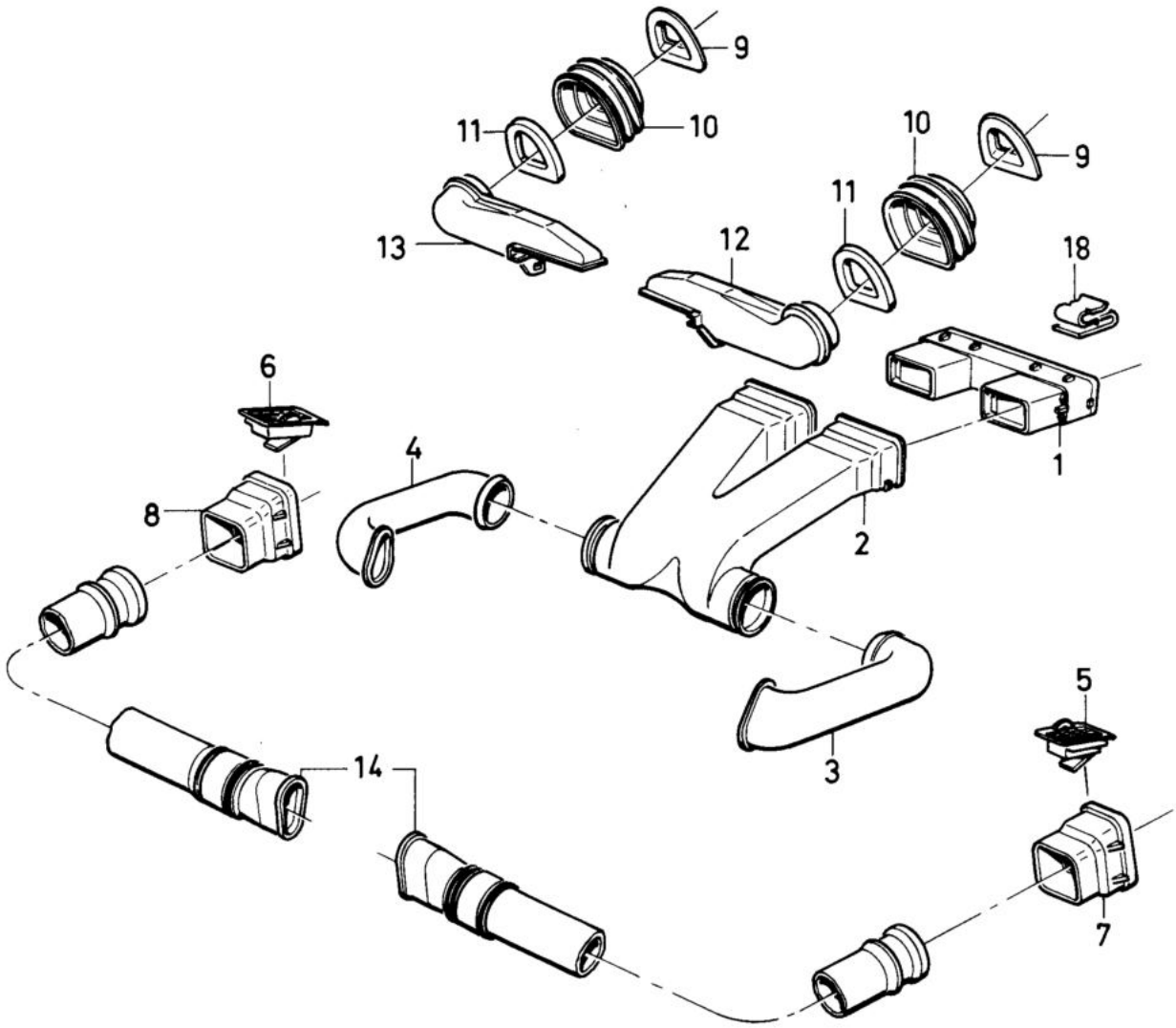

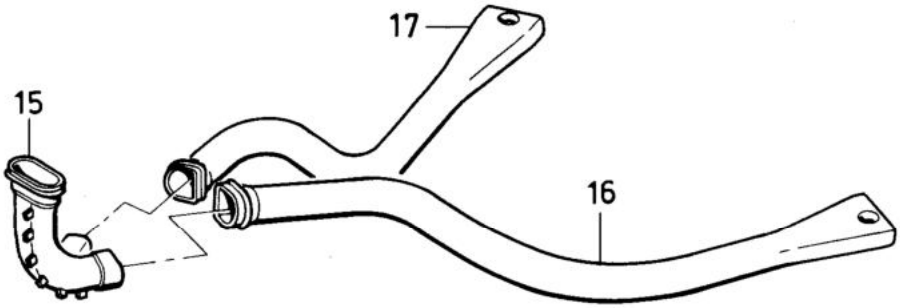

VOLVO PARTS
1090 17272

Sida Page	Grupp Group	Luftkanaler CH 710000-	Air ducts CH 710000-	Illustration 17272 1984-12	0190
20	9				

Pos. Fig.	Antal/Quantity				Artikel nr Part No	Benämning	Description	Sats Kit	B P S R	Anmärkning Notes	
1	1	-	-	-	3284539-8	Ventilhus	Valve housing		4		0020
2	1	-	-	-	3285800-3	Anslutning	Connection		5		0040
3	1	-	-	-	3284822-8	Luftkanal, V	Air duct, L		5		0060
4	1	-	-	-	3284823-6	Luftkanal, H	Air duct, R		5		0080
5	1	-	-	-	3286321-9	Ventilhus, sidoruta, V	Valve housing, side window, L		4		0100 0120
6	1	-	-	-	3286322-7	Ventilhus, sidoruta, H	Valve housing, side window, R		4		0140 0160
7	1	-	-	-	3284556-2	Ventilhus, V	Valve housing, L		4		0180
8	1	-	-	-	3284551-3	Ventilhus, H	Valve housing, R		4		0200
9	2	-	-	-	3285129-7	Anslutningsring	Connection ring		5		022[illegible]
10	2	-	-	-	3200962-3	Bälg	Bellow		5		024[illegible]
11	2	-	-	-	3284512-5	Skumring	Foam ring		5		0260
12	1	-	-	-	3283089-5	Anslutningsslang, V	Connection hose, L		5		0280
13	1	-	-	-	3283090-3	Anslutningsslang, H	Connection hose, R		5		0300
14	2	-	-	-	3284821-0	Anslutningsslang	Connection hose		5		0320
15	1	-	-	-	3284348-4	Luftkanal, bakre	Air duct, rear		5		034[illegible]
16	1	-	-	-	3284536-4	Luftkanal, bakre, V	Air duct, rear, L		5		036[illegible]
17	1	-	-	-	3284537-2	Luftkanal, bakre, H	Air duct, rear, R		5		0380
18	2	-	-	-	1264999-2	Clips	Clip		3		0410