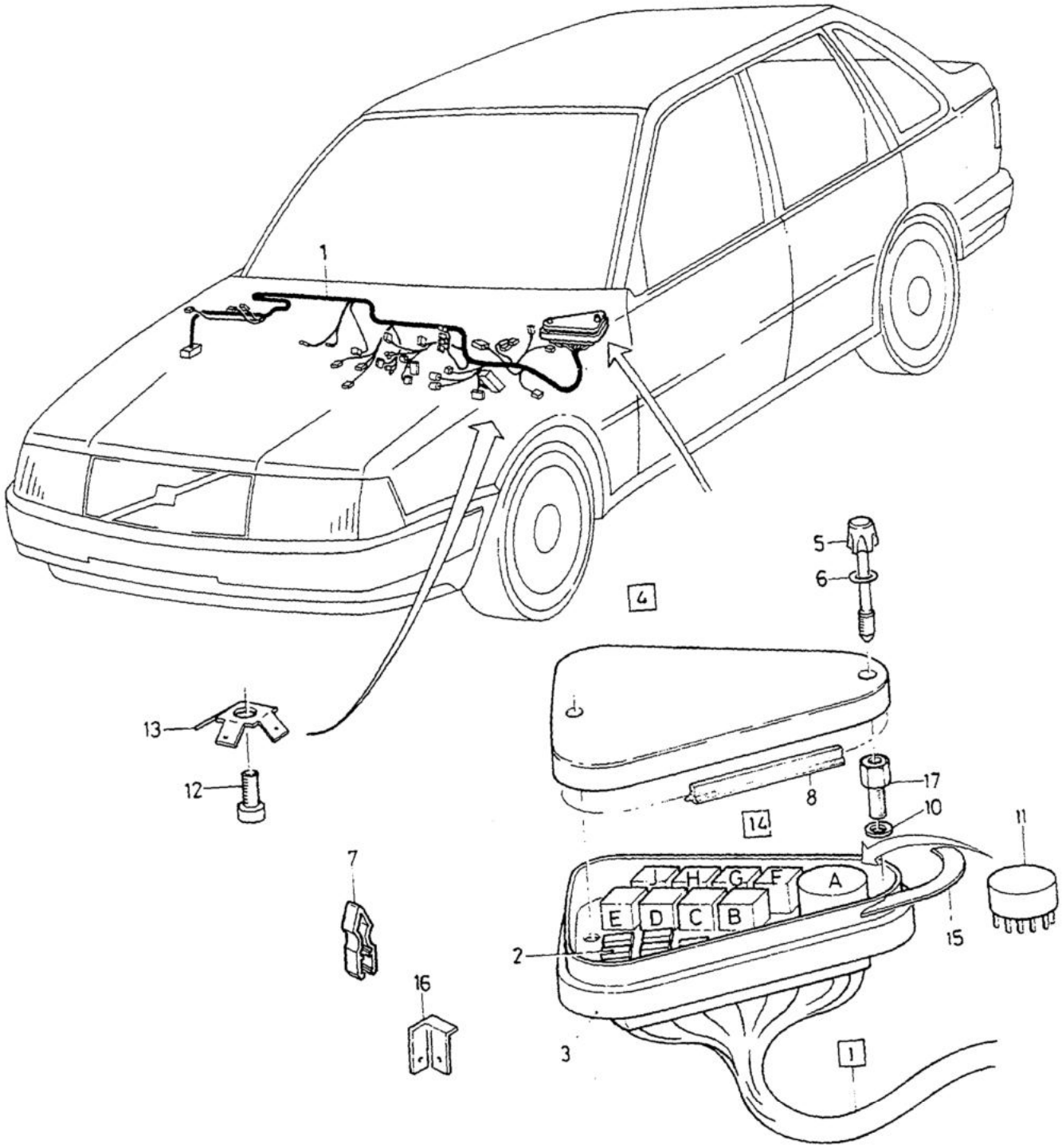

VOLVO PARTS
1037 19508

A	FUSEBOX	SÄKRINGSDOSA	Group Grupp 37
B	ELECTRIC CONTROL UNIT	EL.STYRENHET	
C			Page Sida 463
D			
E		-1991	

Fig	Part No. Artikel nr	Quantity / Antal A	B	C	D	E	PS	Description	Benämning	Notes Anmärkning	SR
1		-	-	-	-	-		Cable harness Dashboard	Ledningsmatta Instrumentbräda	SEE 37•423	
2	969115-5	X	-	-	-	-		•Blade fuse	•Bladsäkring	3A	1
	969160-1	X	-	-	-	-		•Blade fuse	•Bladsäkring	5A	1
	969197-3	X	-	-	-	-		•Blade fuse 7.5a brown	•Bladsäkring 7.5a brun	7.5A	1
	969161-9	X	-	-	-	-		•Blade fuse	•Bladsäkring	10A	1
	969162-7	X	-	-	-	-		•Blade fuse	•Bladsäkring	15A	1
	968547-0	X	-	-	-	-		•Blade fuse	•Bladsäkring	20A	1
	969164-3	X	-	-	-	-		•Blade fuse	•Bladsäkring	30A	1
3	3445380-3	1	-	-	-	-		•El.distrib.centre	•El.fördeln.centrum		4
4	3445381-1	1	-	-	-	-		Cover, assembly	Kåpasammanstälning	CH -205699	2
	3344780-6	1	-	-	-	-		Cover, assembly	Kåpasammanstälning	CH 205700-	2
5	3121657-5	2	-	-	-	-		•Screw	•Skruv		3
6	925052-3	2	-	-	-	-		•Rubber ring	•Gummiring		2
7	3416084-6	1	-	-	-	-		•Drawer	•Dragare		3
8	3344163-5	1	-	-	-	-		•Seal	•Tätning		3
9		-	-	-	-	-		•Cover	•Kåpa		
10	942605-7	2	-	-	-	-		Toothed washer	Tandbricka		2
11	3447204-3	1	-	-	-	-		Adapter	Adapter		2
12	3120695-6	1	-	-	-	-		Screw	Skruv		2
13	3923203-8	1	-	-	-	-		Tab	Vikklamma	(3201829)	2
14	3416796-5	1	-	-	-	-		Failure sensor	Glödtrådvakt		2
								"A"	"A"		
	3296801-8	1	-	-	-	-		Relay	Relä	CH -630129	2
								"B" +15	"B" +15		
	3472210-8	1	-	-	-	-		Relay	Relä	CH 630130-	2
	3268775-8	1	-	-	-	-		Relay	Relä	K,KP,KD,KPD	1
								"B" ignition system	"B" tändsystem		
	3296801-8	1	-	-	-	-		Relay	Relä	CH -630129	2
								"C" foglamp	"C" dimljus		
	3472210-8	1	-	-	-	-		Relay	Relä	CH 630130-	2
	3296801-8	1	-	-	-	-		Relay	Relä	CH -630129	2
								"D" +75	"D" +75		
	3472210-8	1	-	-	-	-		Relay	Relä	CH 630130-	2
	3458602-4	1	-	-	-	-		Relay	Relä	(3431819)	2
								"E"	"E"		
	3414899-9	1	-	-	-	-		Relay	Relä		2
								"F" wiper/washer	"F" torkare/spolare		
	3296801-8	1	-	-	-	-		Relay	Relä	CH -630129	2
								"G" headlamp	"G" strålkastare		
	3472210-8	1	-	-	-	-		Relay	Relä	CH 630130-	2
	3448548-2	1	-	-	-	-		Relay	Relä		2
								"H" wiper/washer	"H" torkare/spolare		
	3416891-4	1	-	-	-	-		Relay	Relä	(N)	2
								"H" foglamp	"H" dimljus		
	3458601-6	1	-	-	-	-		Relay	Relä	(3411683)	2
								"J" interior light	"J" innerbelysning		
☆ 15	3345640-1	1	-	-	-	-		Seal	Tätning	(3433958) L.H.D	3
☆	3345640-1	1	-	-	-	-		Seal	Tätning	(3435874) R.H.D	3
16	3296800-0	1	-	-	-	-		Contact	Kontakt		2
17	3121658-3	1	-	-	-	-		Screw	Skruv		3