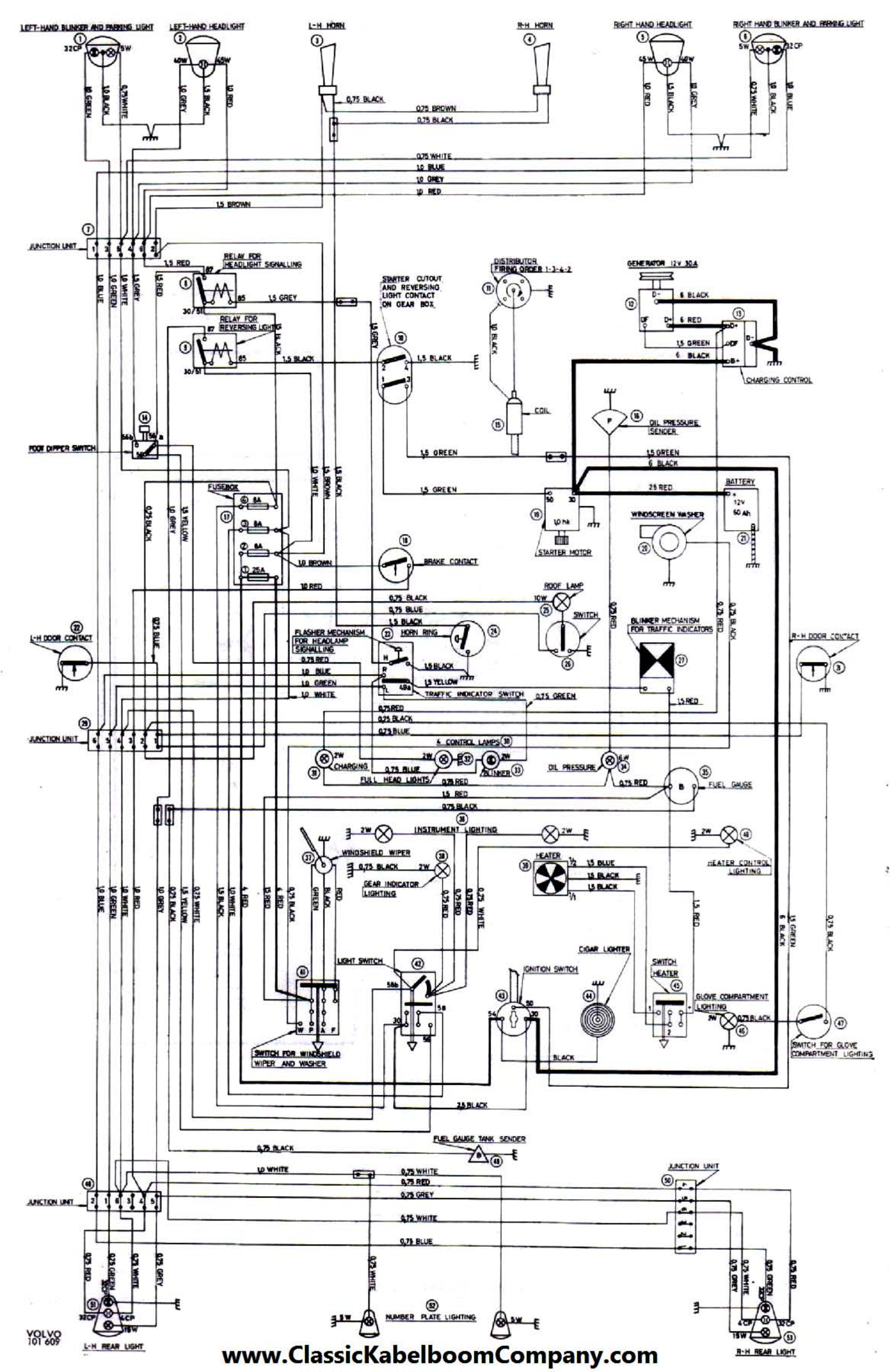

www.ClassicKabelboomCompany.com

WIRING DIAGRAM

from ch. No. 84600 to ch. No. 144399, 2-door model with automatic transmission
from ch. No. 166400 to ch. No. 193799, 4-door model with automatic transmission