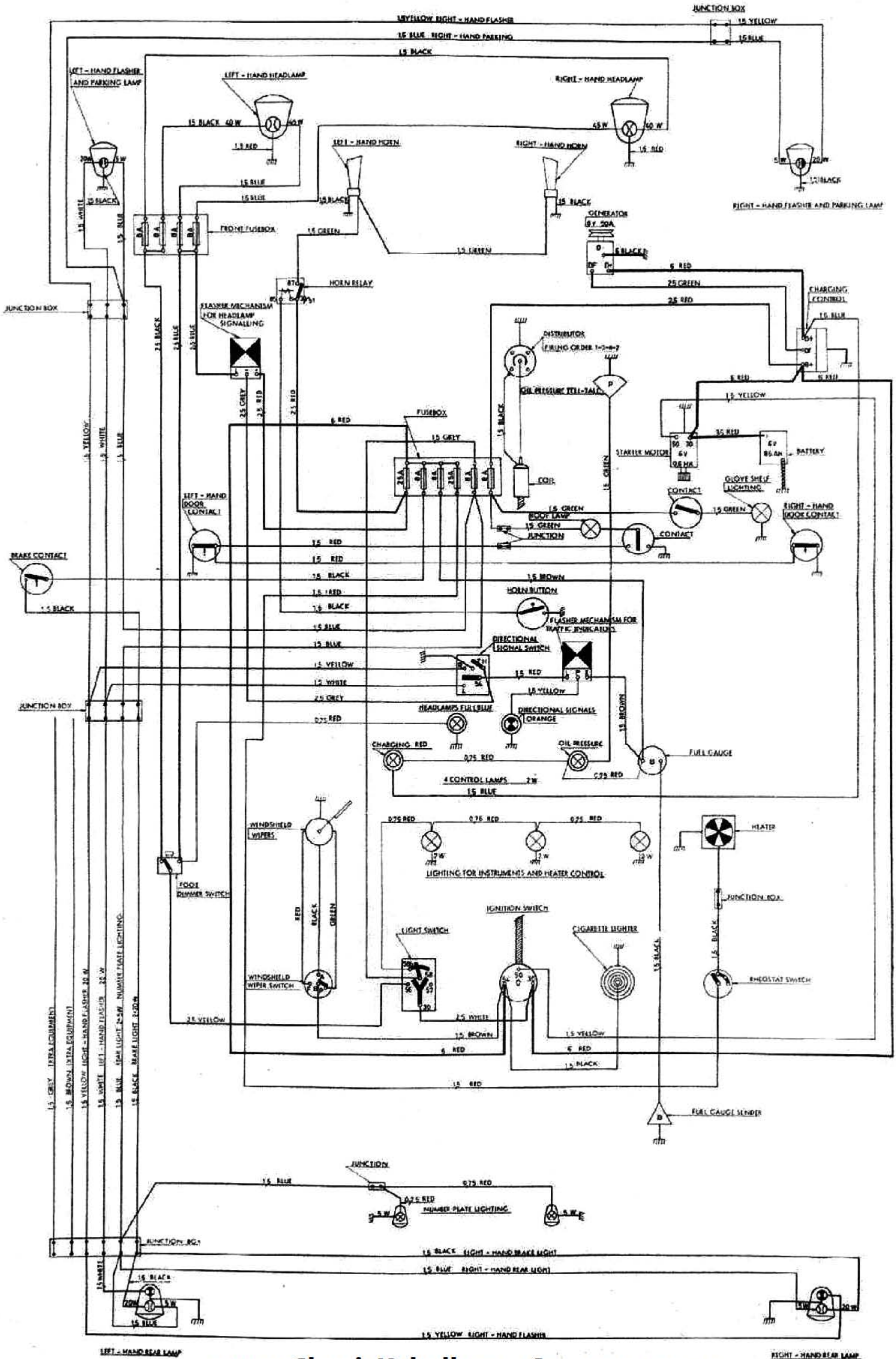

www.ClassicKabelboomCompany.com

Wiring diagram for Volvo 122S.