Volvo p544
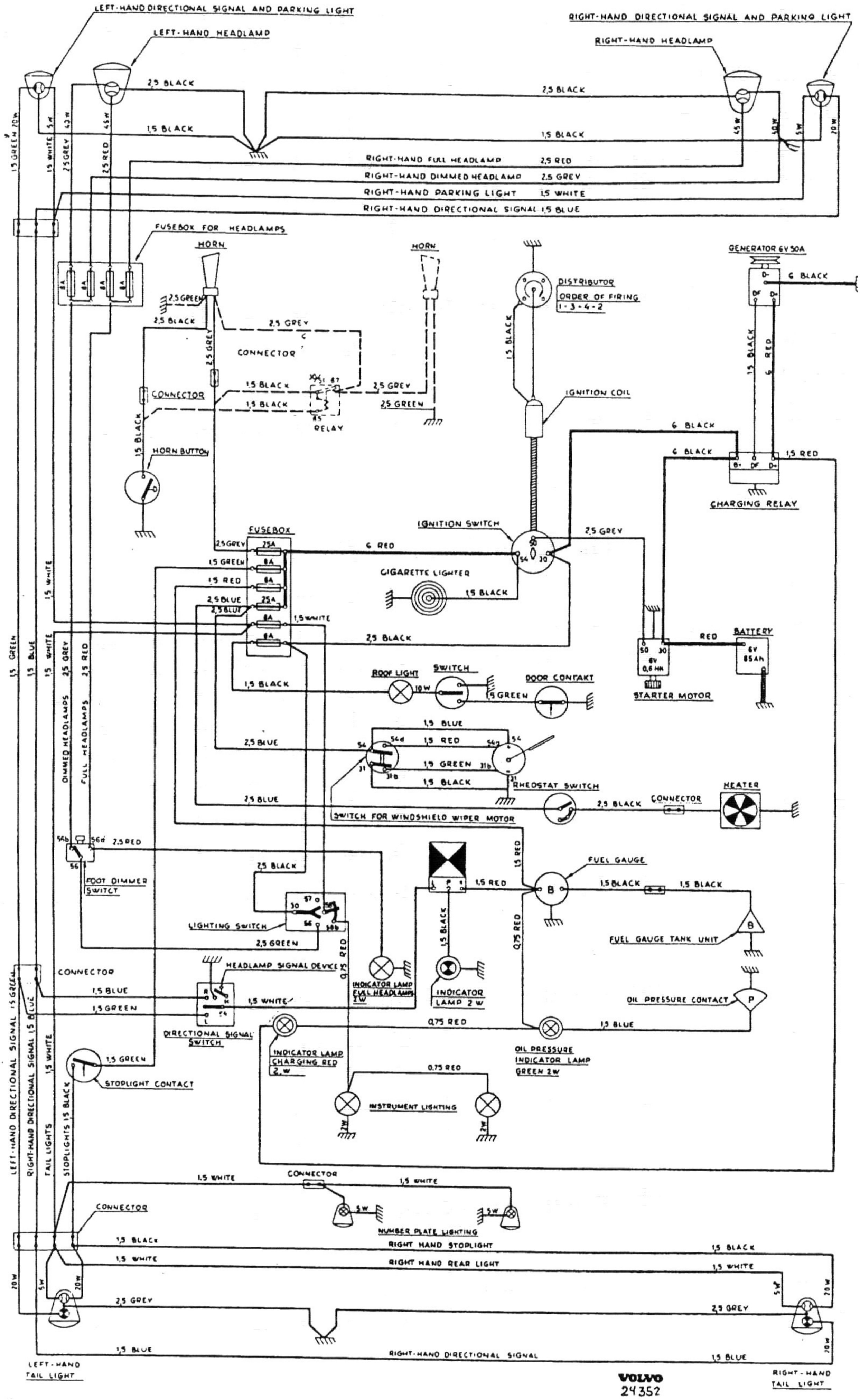
www.ClassicKabelboomCompany.com